8 R..

8.1 R(X).. AM.. [Nm]

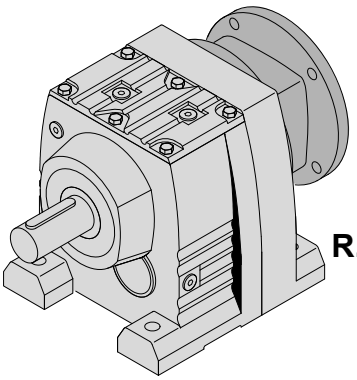

R.. AM..

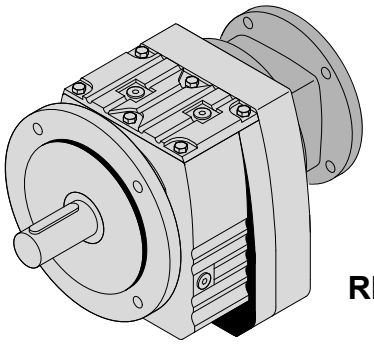

RF.. AM..

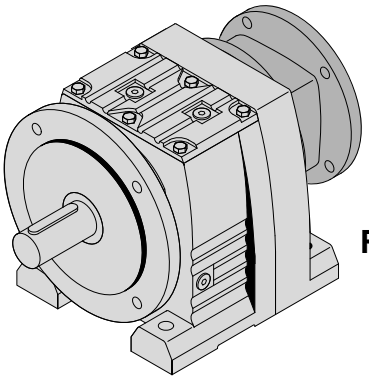

R..F AM..

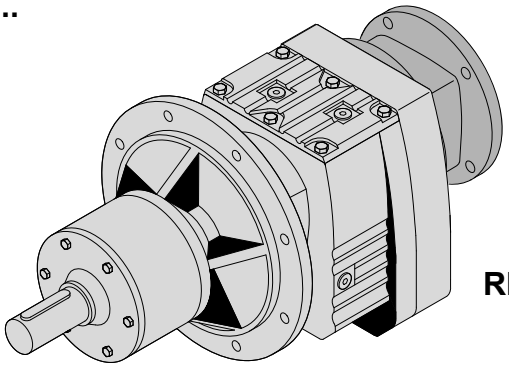

RM.. AM..

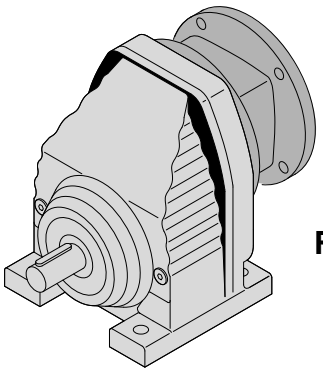

RX.. AM..

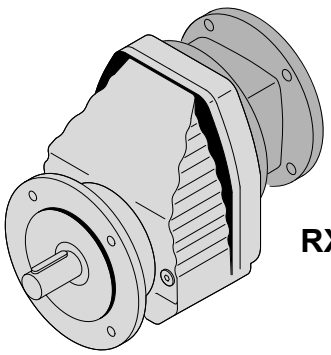

RXF.. AM ..

50392AXX

8.1.1 RX57

n_e = 1400 1/min													69 Nm
	i	n_a [1/min]	$M_{a\,max}$ [Nm]	F_{Ra} [N]	φ (/R) [']	AM 63	71	80	90	100	112	132S/M
RX57 1	**1.30**	1075	63	132	-							
	1.48	946	68	112	-							
	1.65	848	69	430	-							
	1.92	729	69	880	-							
	2.04	686	69	1070	-							
	2.37	591	69	1500	-							
	2.64	530	69	1810	-							
	2.91	481	67	2170	-							
	3.14	446	65	2320	-							
	3.55	394	69	2420	-							
	3.79	369	69	2480	-							
	4.35	322	68	2640	-							
	5.07	276	36	3030	-							
	5.50	255	39	3100	-							

m [kg]		AM						
IEC	s	63	71	80	90	100	112	132S/M
RX57	1	12	13	15	15	20	20	27
NEMA		-	56	143	145	182	184	213/215
RX57	1	-	13	15	15	19	19	24
RXF: + 1.9 kg								

8.1.2 RX67

n_e = 1400 1/min													134 Nm
	i	n_a [1/min]	$M_{a\,max}$ [Nm]	F_{Ra} [N]	φ (/R) [']	AM 63	71	80	90	100	112	132S/M
RX67 1	**1.40**	1000	104	205	-							
	1.61	870	114	245	-							
	1.86	753	126	225	-							
	2.04	686	134	230	-							
	2.40	583	123	1530	-							
	2.54	551	118	2000	-							
	2.89	484	106	2640	-							
	3.20	438	100	2800	-							
	3.77	371	87	3090	-							
	4.30	326	80	3300	-							
	4.53	309	82	3350	-							
	5.18	270	75	3580	-							
	6.07	231	43	4000	-							

m [kg]		AM						
IEC	s	63	71	80	90	100	112	132S/M
RX67	1	15	15	17	17	22	22	29
NEMA		-	56	143	145	182	184	213/215
RX67	1	-	16	17	17	21	21	27
RXF: + 4.0 kg								

8.1.3 RX77

n_e = 1400 1/min														215 Nm
	i	n_a [1/min]	$M_{a\,max}$ [Nm]	F_{Ra} [N]	φ (/R) [']	AM 63	71	80	90	100	112	132S/M	132ML
RX77 1	**1.42**	986	155	315	-								
	1.67	838	173	315	-								
	1.88	745	187	335	-								
	2.13	657	200	435	-								
	2.43	576	215	510	-								
	2.70	519	215	1110	-								
	3.08	455	193	2560	-								
	3.25	431	182	3200	-								
	3.70	378	153	4290	-								
	4.04	347	143	4500	-								
	4.73	296	123	4900	-								
	5.35	262	103	5240	-								
	5.63	249	110	5300	-								
	6.41	218	103	5600	-								
	7.47	187	53	6200	-								
	8.00	175	57	6330	-								

m [kg]		AM							
IEC	s	63	71	80	90	100	112	132S/M	132ML
RX77	1	25	25	27	27	32	32	39	39
NEMA		-	56	143	145	182	184	213/215	-
RX77	1	-	25	27	27	31	31	37	-
RXF: + 2.3 kg									

8.1.4 RX87

n_e = 1400 1/min														405 Nm
	i	n_a [1/min]	$M_{a\,max}$ [Nm]	F_{Ra} [N]	φ (/R) [']	AM 80	90	100	112	132S/M	132ML	160	180
RX87 1	**1.39**	1005	290	74	-								
	1.60	875	315	74	-								
	1.93	725	355	185	-								
	2.15	651	385	42	-								
	2.48	565	405	470	-								
	2.76	507	405	1200	-								
	3.09	453	405	1950	-								
	3.48	402	405	2730	-								
	3.78	370	305	5030	-								
	4.50	311	290	5500	-								
	5.07	276	250	5980	-								
	5.56	252	225	6320	-								
	6.45	217	192	6850	-								
	7.20	194	140	7380	-								
	7.63	183	149	7490	-								
	8.65	162	139	7890	-								

m [kg]		AM							
IEC	s	80	90	100	112	132S/M	132ML	160	180
RX87	1	43	43	48	48	56	56	72	72
NEMA		143	145	182	184	213/215	-	254/256	284/286
RX87	1	43	43	47	47	54	-	67	69
RXF: + 5.0 kg									

8.1.5 RX97

n_e = 1400 1/min													595 Nm
	i	n_a [1/min]	$M_{a\,max}$ [Nm]	F_{Ra} [N]	φ (/R) [']	AM 100	112	132S/M	132ML	160	180	200	225
RX97 1	**1.42**	986	455	132	-								
	1.64	854	505	51	-								
	1.96	714	570	19	-								
	2.24	625	595	495	-								
	2.64	530	595	1980	-								
	2.92	479	595	2810	-								
	3.30	424	595	3730	-								
	3.64	385	595	4530	-								
	4.04	347	595	5380	-								
	4.52	310	595	6180	-								
	4.91	285	395	7220	-								
	5.79	242	420	7630	-								
	6.56	213	300	8500	-								
	7.16	196	260	8950	-								
	8.23	170	225	9560	-								

m [kg]		AM							
IEC	**s**	**100**	**112**	**132S/M**	**132ML**	**160**	**180**	**200**	**225**
RX97	1	73	73	79	79	97	97	115	120
NEMA		182	184	213/215	-	254/256	284/286	324/326	364/365
RX97	1	72	72	77	-	92	94	110	110
RXF: + 8.6 kg									

8.1.6 RX107

n_e = 1400 1/min													830 Nm
	i	n_a [1/min]	$M_{a\,max}$ [Nm]	F_{Ra} [N]	φ (/R) [']	AM 100	112	132S/M	132ML	160	180	200	225
RX107 1	**1.44**	972	645	315	-								
	1.71	819	705	480	-								
	1.95	718	765	555	-								
	2.30	609	830	900	-								
	2.64	530	830	2160	-								
	3.07	456	830	3600	-								
	3.38	414	830	4490	-								
	3.81	367	830	5550	-								
	4.20	333	830	6420	-								
	4.65	301	695	7450	-								
	5.19	270	695	7850	-								
	5.61	250	455	9080	-								
	6.63	211	460	9700	-								

m [kg]		AM							
IEC	**s**	**100**	**112**	**132S/M**	**132ML**	**160**	**180**	**200**	**225**
RX107	1	105	105	110	110	130	130	145	150
NEMA		182	184	213/215	-	254/256	284/286	324/326	364/365
RX107	1	105	105	105	-	125	125	145	145
RXF: + 16.8 kg									

8.1.7 R27

n_e = 1400 1/min									130 Nm
	i	n_a [1/min]	$M_{a\,max}$ [Nm]	F_{Ra} [N]	φ (/R) [']	AM 63	AM 71	AM 80	AM 90
R27 2	**3.37**	415	79	900	-				
	4.00	350	85	900	-				
	4.27	328	87	920	-				
	5.00	280	95	860	-				
	5.60	250	99	880	-				
	6.59	212	106	880	-				
	7.63	183	112	900	-				
	8.16	172	116	870	-				
	9.41	149	122	900	-				
	10.13	138	122	1890	-				
	11.86	118	129	1980	-				
	13.28	105	130	2140	-				
	15.63	90	130	2290	-				
	18.08	77	130	2440	-				
	19.35	72	130	2510	-				
	22.32	63	130	2660	-				
	26.09	54	130	2840	-				
	28.37	49	130	2940	-				
R27 3	**24.47**	57	130	2760	-				
	28.78	49	130	2950	-				
	32.47	43	130	3100	-				
	36.79	38	130	3260	-				
	39.25	36	130	3350	-				
	44.90	31	130	3530	-				
	48.17	29	130	3630	-				
	55.87	25	130	3840	-				
	61.30	23	130	3980	-				
	69.47	20	130	4180	-				
	74.11	19	130	4230	-				
	84.78	17	130	4230	-				
	90.96	15	130	4230	-				
	105.49	13	130	4230	-				
	123.91	11	130	4230	-				
	135.09	10	130	4230	-				

m [kg]		AM			
IEC	**s**	**63**	**71**	**80**	**90**
R27	2	6.2	6.5	8.9	8.9
R27	3	6.5	6.7	9.1	9.2
NEMA		-	56	143	145
R27	2	-	6.8	8.9	8.9
R27	3	-	7.1	9.1	9.2
RF: + -0.1 kg					

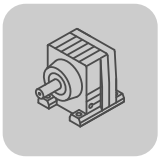

8.1.8 R37

n_e = 1400 1/min									200 Nm
	i	n_a [1/min]	$M_{a\,max}$ [Nm]	F_{Ra} [N]	φ (/R) [']	AM 63	AM 71	AM 80	AM 90
R37 2	**3.41**	411	112	900	14				
	4.05	346	122	840	13				
	4.32	324	126	820	13				
	5.06	277	135	790	13				
	5.67	247	142	760	12				
	6.67	210	144	1000	12				
	7.97	176	156	1720	8				
	9.47	148	167	1760	8				
	10.11	138	170	1820	8				
	11.83	118	183	1810	8				
	13.25	106	190	1880	8				
	15.60	90	200	2010	8				
	18.05	78	200	2390	8				
	19.31	73	200	2570	7				
	22.27	63	200	2970	7				
	26.03	54	185	3860	7				
	28.32	49	200	3690	7				
R37 3	**24.42**	57	200	3240	9				
	28.73	49	200	3740	9				
	32.40	43	200	4120	9				
	36.72	38	200	4540	9				
	39.17	36	200	4760	9				
	44.81	31	200	4940	9				
	48.08	29	200	4940	9				
	55.76	25	200	4940	9				
	61.18	23	200	4940	8				
	69.33	20	200	4940	8				
	73.96	19	200	4940	8				
	84.61	17	200	4940	8				
	90.77	15	200	4940	8				
	105.28	13	200	4940	8				
	123.66	11	200	4940	8				
	134.82	10	200	4940	8				

m [kg]		AM			
IEC	s	63	71	80	90
R37	2	12	12	15	15
R37	3	12	13	15	15
NEMA		-	56	143	145
R37	2	-	13	15	15
R37	3	-	13	15	15
RF: + 1.5 kg					

8.1.9 R47

n_e = 1400 1/min													300 Nm
	i	n_a [1/min]	$M_{a\,max}$ [Nm]	F_{Ra} [N]	φ (/R) [']	AM 63	71	80	90	100	112	132S/M
R47 2	**3.83**	366	144	2080	11							
	4.34	323	146	2190	11							
	4.85	289	150	2280	10							
	5.64	248	155	2410	10							
	6.00	233	156	2470	10							
	6.96	201	159	2620	10							
	7.76	180	163	2720	10							
	8.01	175	205	2690	8							
	9.07	154	220	2780	8							
	10.15	138	230	2880	7							
	11.79	119	245	3020	7							
	12.54	112	250	3080	7							
	14.56	96	265	3230	7							
	16.22	86	275	3350	7							
	17.89	78	290	3390	7							
	19.27	73	295	3530	7							
	21.81	64	300	3710	7							
	23.28	60	300	3820	7							
	26.74	52	300	4050	7							
	31.12	45	220	4610	7							
	33.79	41	240	4680	7							
R47 3	**23.59**	59	300	3840	8							
	26.70	52	300	4050	8							
	29.88	47	300	4240	8							
	34.73	40	300	4520	8							
	36.93	38	300	4630	8							
	42.87	33	300	4930	8							
	47.75	29	300	5140	8							
	52.69	27	300	5350	8							
	56.73	25	300	5420	8							
	64.21	22	300	5420	8							
	68.54	20	300	5420	8							
	76.23	18	300	5420	7							
	84.90	16	300	5420	7							
	93.68	15	300	5420	7							
	100.86	14	300	5420	7							
	114.17	12	300	5420	7							
	121.87	11	300	5420	7							
	139.99	10	300	5420	7							
	162.94	8.6	300	5420	7							
	176.88	7.9	300	5420	7							

m [kg]		AM						
IEC	s	63	71	80	90	100	112	132S/M
R47	2	16	16	18	19	23	23	30
R47	3	17	17	19	19	24	24	31
NEMA		-	56	143	145	182	184	213/215
R47	2	-	17	18	19	22	22	28
R47	3	-	17	19	19	23	23	28
RF: + 0.1 kg								

8.1.10 R57

n_e = 1400 1/min													450 Nm
	i	n_a [1/min]	$M_{a\,max}$ [Nm]	F_{Ra} [N]	φ (/R) [']	AM 63	71	80	90	100	112	132S/M
R57 2	**4.39**	319	280	1900	10							
	5.05	277	305	1730	10							
	5.82	241	320	1820	10							
	6.41	218	335	1770	9							
	7.53	186	350	1950	9							
	7.97	176	355	2020	9							
	9.06	155	375	2010	9							
	9.35	150	370	3180	7							
	10.79	130	390	3330	7							
	11.88	118	405	3430	7							
	13.95	100	430	3610	7							
	14.77	95	435	3690	7							
	16.79	83	450	3860	7							
	18.60	75	450	4050	7							
	21.93	64	450	4370	7							
	24.99	56	450	4640	6							
	26.31	53	450	4750	6							
R57 3	**26.97**	52	450	4800	8							
	30.18	46	450	5040	8							
	35.07	40	450	5390	8							
	37.30	38	450	5530	8							
	43.30	32	450	5900	8							
	48.23	29	450	6170	8							
	53.22	26	450	6430	8							
	57.29	24	450	6630	8							
	64.85	22	450	6980	8							
	69.23	20	450	7100	7							
	80.55	17	450	7100	7							
	89.71	16	450	7100	7							
	98.99	14	450	7100	7							
	106.58	13	450	7100	7							
	120.63	12	450	7100	7							
	128.77	11	450	7100	7							
	147.92	9.5	450	7100	7							
	172.17	8.1	450	7100	7							
	186.89	7.5	450	7100	7							

m [kg]		AM						
IEC	s	63	71	80	90	100	112	132S/M
R57	2	21	21	23	23	28	28	35
R57	3	22	22	24	24	29	29	36
NEMA		-	56	143	145	182	184	213/215
R57	2	-	22	23	23	27	27	33
R57	3	-	22	24	24	28	28	34
RF: + 3.4 kg / RM: + 15.4 kg								

8.1.11 R67

n_e = 1400 1/min													600 Nm
	i	n_a [1/min]	$M_{a\,max}$ [Nm]	F_{Ra} [N]	φ (/R) [']	AM 63	71	80	90	100	112	132S/M
R67 2	**4.29**	326	270	5000	10							
	4.93	284	290	5210	9							
	5.70	246	310	5450	9							
	6.27	223	330	5590	9							
	7.36	190	370	5790	8							
	7.79	180	380	5830	8							
	8.70	161	440	5960	7							
	10.00	140	470	6220	7							
	11.54	121	500	6500	7							
	12.70	110	520	6640	6							
	14.91	94	550	6980	6							
	15.79	89	560	7130	6							
	17.95	78	590	7330	6							
	19.89	70	600	7560	6							
	23.44	60	560	8010	6							
	26.72	52	540	8210	6							
	28.13	50	540	8210	6							
R67 3	**28.83**	49	520	8400	7							
	32.27	43	540	8210	7							
	37.50	37	570	7900	7							
	39.88	35	580	7790	7							
	46.29	30	600	7560	7							
	51.56	27	600	7560	7							
	56.89	25	600	7560	7							
	61.26	23	600	7560	7							
	69.75	20	600	7560	7							
	74.17	19	600	7560	7							
	86.11	16	600	7560	6							
	95.91	15	600	7560	6							
	105.83	13	600	7560	6							
	113.94	12	600	7560	6							
	128.97	11	600	7560	6							
	137.67	10	600	7560	6							
	158.14	8.9	600	7560	6							
	184.07	7.6	600	7560	6							
	199.81	7.0	600	7560	6							

m [kg]		AM						
IEC	s	63	71	80	90	100	112	132S/M
R67	2	28	28	30	30	35	35	42
R67	3	28	29	31	31	36	36	43
NEMA		-	56	143	145	182	184	213/215
R67	2	-	28	30	30	34	34	39
R67	3	-	29	31	31	35	35	40
RF: + 3.2 kg / RM: + 19.0 kg								

8.1.12 R77

n_e = 1400 1/min														820 Nm
	i	n_a [1/min]	$M_{a\,max}$ [Nm]	F_{Ra} [N]	φ (/R) [']	AM 63	71	80	90	100	112	132S/M	132ML
R77 2	**5.31**	264	510	3990	8								
	5.99	234	540	3990	8								
	6.79	206	580	3850	8								
	7.74	181	610	3940	8								
	8.59	163	630	4110	7								
	9.64	145	630	6300	7								
	10.88	129	660	6490	6								
	12.33	114	690	6740	6								
	14.05	100	720	7050	6								
	15.60	90	740	7390	6								
	17.82	79	780	7620	6								
	18.80	74	780	7980	6								
	21.43	65	820	8250	6								
	23.37	60	820	8870	6								
R77 3	**25.23**	55	780	10100	7								
	29.00	48	820	9920	7								
	33.47	42	820	9920	7								
	36.83	38	820	9920	7								
	43.26	32	820	9920	7								
	45.81	31	820	9920	7								
	52.07	27	820	9920	7								
	57.68	24	820	9920	7								
	65.77	21	820	9920	7								
	77.24	18	820	9920	6								
	81.80	17	820	9920	6								
	92.97	15	820	9920	6								
	102.99	14	820	9920	6								
	121.42	12	820	9920	6								
	138.39	10	820	9920	6								
	145.67	9.6	820	9920	6								
	166.59	8.4	820	9920	6								
	195.24	7.2	820	9920	6								

m [kg]		AM							
IEC	s	63	71	80	90	100	112	132S/M	132ML
R77	2	33	34	36	36	40	40	47	47
R77	3	34	35	37	37	41	41	48	48
NEMA		-	56	143	145	182	184	213/215	-
R77	2	-	34	36	36	39	39	45	-
R77	3	-	35	37	37	40	40	46	-
RF: + 5.7 kg / RM: + 30.7 kg									

8.1.13 R87

n_e = 1400 1/min													1550 Nm
	i	n_a [1/min]	$M_{a\,max}$ [Nm]	F_{Ra} [N]	φ (/R) [']	AM 80	90	100	112	132S/M	132ML	160	180
R87 2	5.30	264	910	8980	7								
	6.39	219	1020	9450	7								
	7.13	196	1070	9780	7								
	8.22	170	1160	10200	7								
	9.14	153	1210	10500	6								
	9.90	141	1180	10400	6								
	11.93	117	1230	11200	6								
	13.33	105	1280	11600	6								
	15.35	91	1340	12100	6								
	17.08	82	1390	12600	6								
	19.10	73	1440	13000	6								
	21.51	65	1500	13600	6								
	23.40	60	1550	13900	6								
	27.84	50	1550	15000	6								
	31.40	45	1550	7820	5								
	34.40	41	1500	9480	5								
R87 3	27.88	50	1500	15100	7								
	32.66	43	1550	16000	7								
	36.84	38	1550	16800	7								
	41.74	34	1550	16900	7								
	47.58	29	1550	16900	7								
	52.82	27	1550	13500	6								
	60.35	23	1550	15200	6								
	63.68	22	1550	15800	6								
	72.57	19	1550	16900	6								
	81.92	17	1550	16900	6								
	93.38	15	1550	16900	6								
	103.65	14	1550	16900	6								
	118.43	12	1550	16900	6								
	124.97	11	1550	16900	6								
	142.41	9.8	1550	16900	6								
	155.34	9.0	1550	16900	6								
	181.77	7.7	1550	16900	6								
	205.71	6.8	1550	16900	6								
	216.54	6.5	1550	16900	6								
	246.54	5.7	1550	16900	6								

m [kg]		AM							
IEC	s	80	90	100	112	132S/M	132ML	160	180
R87	2	62	62	67	67	74	74	90	90
R87	3	63	63	68	68	76	76	92	92
NEMA		143	145	182	184	213/215	-	254/256	284/286
R87	2	62	62	66	66	72	-	85	88
R87	3	63	63	67	67	74	-	87	89
RF: + 7.1 kg / RM: + 36.8 kg									

8.1.14 R97

n_e = 1400 1/min													3000 Nm
	i	n_a [1/min]	$M_{a\,max}$ [Nm]	F_{Ra} [N]	φ (/R) [']	AM 100	112	132S/M	132ML	160	180	200	225
R97 2	**4.50**	311	1630	9500	6								
	5.20	269	1780	9850	6								
	6.21	225	1890	10500	6								
	7.12	197	2000	10900	6								
	8.39	167	2030	11700	6								
	9.29	151	2030	12200	6								
	10.83	129	2090	12100	6								
	12.39	113	2190	12700	6								
	14.62	96	2300	13400	6								
	16.17	87	2400	13800	6								
	18.24	77	2500	14400	6								
	20.14	70	2610	14800	5								
	22.37	63	2720	15300	5								
	25.03	56	2830	15900	5								
	27.19	51	2560	8380	5								
	32.05	44	2560	10600	5								
R97 3	**27.58**	51	2670	16900	6								
	33.25	42	2890	17900	6								
	37.13	38	3000	18600	6								
	42.78	33	3000	19800	6								
	47.58	29	3000	19800	6								
	53.21	26	3000	19800	6								
	59.92	23	3000	19800	6								
	65.21	21	3000	19800	6								
	72.17	19	3000	18000	6								
	83.15	17	3000	19800	6								
	92.48	15	3000	19800	6								
	103.44	14	3000	19800	6								
	116.48	12	3000	19800	6								
	126.75	11	3000	19800	6								
	150.78	9.3	3000	19800	6								
	170.02	8.2	3000	19800	6								
	186.30	7.5	3000	19800	6								
	216.28	6.5	3000	19800	6								
	241.25	5.8	3000	19800	6								
	255.71	5.5	3000	19800	6								
	289.74	4.8	3000	19800	6								

m [kg]		AM							
IEC	s	100	112	132S/M	132ML	160	180	200	225
R97	2	105	105	115	115	130	130	145	150
R97	3	110	110	115	115	135	135	150	155
NEMA		182	184	213/215	-	254/256	284/286	324/326	364/365
R97	2	105	105	110	-	125	130	145	145
R97	3	110	110	115	-	130	130	150	150
RF: + 17.2 kg / RM: + 68.5 kg									

8.1.15 R107

n_e = 1400 1/min													4300 Nm
	i	n_a [1/min]	$M_{a\,max}$ [Nm]	F_{Ra} [N]	φ (/R) [']	AM 100	112	132S/M	132ML	160	180	200	225
R107 2	**4.92**	285	2900	11300	9								
	5.82	241	2970	12100	9								
	6.66	210	2970	12800	9								
	7.86	178	2970	13800	9								
	8.56	164	4300	11300	7								
	10.13	138	4300	12400	7								
	11.59	121	4300	13300	7								
	13.66	102	4300	14400	7								
	15.65	89	4300	15400	7								
	18.21	77	4300	16600	7								
	20.07	70	4300	17300	7								
	22.62	62	4300	18300	7								
	24.90	56	4300	19200	7								
	27.58	51	4300	20100	7								
	30.77	45	4300	21100	7								
R107 3	**29.49**	47	4300	20700	7								
	35.26	40	4300	22400	7								
	40.37	35	4300	23800	7								
	47.63	29	4300	25500	7								
	52.68	27	4300	26600	7								
	59.41	24	4300	28000	7								
	65.60	21	4300	29200	7								
	72.88	19	4300	29500	7								
	78.57	18	4300	29500	7								
	92.70	15	4300	29500	7								
	102.53	14	4300	29500	7								
	115.63	12	4300	29500	7								
	127.68	11	4300	29500	7								
	141.83	9.9	4300	29500	7								
	158.68	8.8	4300	29500	7								
	172.34	8.1	4300	29500	7								
	203.16	6.9	4300	29500	7								
	229.95	6.1	4300	29500	7								
	251.15	5.6	4300	29500	7								

m [kg]		AM							
IEC	s	100	112	132S/M	132ML	160	180	200	225
R107	2	160	160	165	165	185	185	200	205
R107	3	170	170	170	170	190	190	205	210
NEMA		182	184	213/215	-	254/256	284/286	324/326	364/365
R107	2	160	160	160	-	180	180	200	200
R107	3	165	165	170	-	185	185	205	205
RF: + 6.0 kg / RM: + 94.0 kg									

8.1.16 R137

n_e = 1400 1/min												8000 Nm
	i	n_a [1/min]	$M_{a\,max}$ [Nm]	F_{Ra} [N]	φ (/R) [']	AM 132S/M	132ML	160	180	200	225
R137 2	**5.15**	272	4600	34500	8						
	6.38	219	5110	35900	8						
	7.59	184	5110	39000	8						
	8.71	161	7840	27600	6						
	10.79	130	8000	31100	6						
	12.83	109	8000	34700	6						
	14.51	96	8000	37300	6						
	16.80	83	8000	40600	6						
	19.04	74	8000	43500	6						
	22.00	64	8000	47100	6						
	24.12	58	8000	49400	6						
	29.57	47	7780	53900	6						
R137 3	**27.83**	50	7680	54100	6						
	32.91	43	8000	53400	6						
	37.65	37	8000	53400	6						
	44.39	32	8000	53400	6						
	50.86	28	8000	53400	6						
	59.17	24	8000	53400	6						
	65.20	21	8000	53400	6						
	73.49	19	8000	53400	6						
	80.91	17	8000	53400	6						
	88.70	16	8000	53400	6						
	103.20	14	8000	53400	6						
	113.72	12	8000	53400	6						
	128.18	11	8000	53400	6						
	141.12	9.9	8000	53400	6						
	156.31	9.0	8000	53400	6						
	174.40	8.0	8000	53400	6						
	188.45	7.4	8000	53400	6						
	222.60	6.3	8000	53400	6						

m [kg]		AM					
IEC	**s**	**132S/M**	**132ML**	**160**	**180**	**200**	**225**
R137	2	245	245	265	265	280	285
R137	3	255	255	275	275	290	295
NEMA		213/215	-	254/256	284/286	324/326	364/365
R137	2	245	-	260	260	280	280
R137	3	255	-	270	270	290	290
RF: + 23.3 kg / RM: + 134.4 kg							

8.1.17 R147

n_e = 1400 1/min													13000 Nm
	i	n_a [1/min]	$M_{a\,max}$ [Nm]	F_{Ra} [N]	φ (/R) [']	AM 132ML	160	180	200	225	250	280
R147 2	**5.00**	280	8670	49300	8							
	5.89	238	8670	53200	8							
	7.25	193	8670	58400	8							
	8.26	169	13000	49900	6							
	9.74	144	13000	54400	6							
	11.99	117	13000	60400	5							
	13.91	101	12600	63400	5							
	15.64	90	13000	62700	5							
	18.04	78	10500	67000	5							
	20.44	68	12000	64600	5							
R147 3	**24.19**	58	11900	64700	6							
	29.95	47	13000	62700	6							
	35.64	39	13000	62700	6							
	40.29	35	13000	62700	6							
	46.65	30	13000	62700	6							
	52.87	26	13000	62700	6							
	61.09	23	13000	62700	6							
	66.99	21	13000	62700	6							
	72.09	19	13000	62700	6							
	83.47	17	13000	62700	6							
	94.60	15	13000	62700	6							
	109.31	13	13000	62700	5							
	119.86	12	13000	62700	5							
	146.91	9.5	13000	62700	5							
	163.31	8.6	13000	62700	5							

m [kg]		AM						
IEC	s	132ML	160	180	200	225	250	280
R147	2	380	390	390	405	410	445	445
R147	3	390	405	405	420	425	455	455
NEMA		-	254/256	284/286	324/326	364/365	-	-
R147	2	-	385	390	405	405	-	-
R147	3	-	400	400	415	415	-	-
RF: + 8.3 kg / RM: + 175.7 kg								

8.1.18 R167

n_e = 1400 1/min												18000 Nm
	i	n_a [1/min]	$M_{a\,max}$ [Nm]	F_{Ra} [N]	φ (/R) [']	AM 160	180	200	225	250	280
R167 2	**10.24**	137	17000	82500	5						
	11.99	117	17000	88700	5						
	14.48	97	18000	93800	5						
	16.98	82	15000	108900	5						
	19.03	74	16000	111400	5						
	21.85	64	13000	120000	5						
	24.57	57	14000	120000	5						
	30.71	46	10000	120000	5						
	37.74	37	9000	120000	5						
	46.00	30	7000	120000	5						
R167 3	**23.71**	59	18000	116500	6						
	27.96	50	18000	120000	6						
	34.41	41	18000	120000	6						
	39.92	35	18000	120000	6						
	44.87	31	18000	120000	6						
	51.76	27	18000	120000	6						
	58.65	24	18000	120000	6						
	67.40	21	18000	120000	6						
	73.70	19	18000	120000	6						
	82.91	17	18000	120000	5						
	93.19	15	18000	120000	5						
	107.49	13	18000	120000	5						
	121.81	11	18000	120000	5						
	139.98	10	18000	120000	5						
	153.07	9.1	18000	120000	5						
	186.93	7.5	18000	120000	5						
	229.71	6.1	18000	120000	5						

m [kg]		AM					
IEC	s	160	180	200	225	250	280
R167	2	650	650	670	670	700	700
R167	3	650	650	670	680	700	700
NEMA		254/256	284/286	324/326	364/365	-	-
R167	2	640	640	660	660	-	-
R167	3	650	650	670	670	-	-
RF: + 6.4 kg / RM: + 201.8 kg							

8.2 R.. AT.. [Nm]

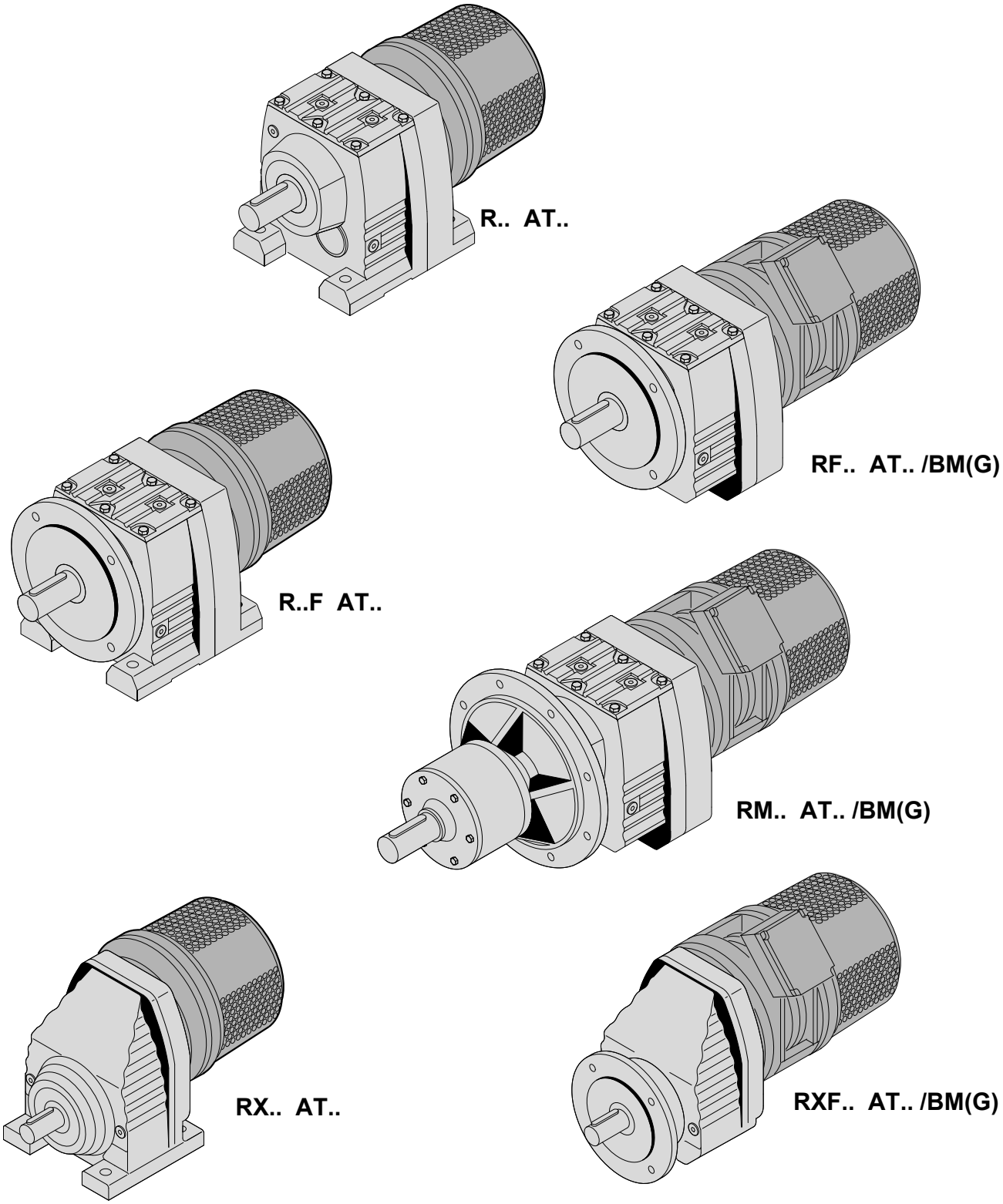

8.2.1 R..AT/ DRS..4

		P_m [kW]				Sn [%]	
R67	DRS71S4	0,37	AT311	T11	0,42	12	
	DRS71M4	0,55	AT312	T11D	0,55	11	
	DRS80S4	0,75	AT312	T11D	0,7	11	
	DRS80M4	1,1	AT312	T11D	0,72	15	
	DRS90M4	1,5	AT321	T21	0,85	9	
	DRS90L4	2,2	AT321	T21	0,9	13	
	DRS100M4	3	AT322	T21D	1,53	11	
	DRS100LC4	4	AT322	T21D	1,6	12	
R77	DRS71S4	0,37	AT311	T11	0,42	12	
	DRS71M4	0,55	AT312	T11D	0,55	11	
	DRS80S4	0,75	AT312	T11D	0,7	11	
	DRS80M4	1,1	AT312	T11D	0,72	15	
	DRS90M4	1,5	AT421	T21	0,85	9	
	DRS90L4	2,2	AT421	T21	0,9	13	
	DRS100M4	3	AT422	T21D	1,53	11	→ 214ff
	DRS100LC4	4	AT422	T21D	1,6	12	→ 217ff
	DRS112M4	4	AT422	T21D	1,6	12	
R87	DRS80M4	1,1	AT312	T11D	0,72	15	
	DRS90M4	1,5	AT421	T21	0,85	9	
	DRS90L4	2,2	AT421	T21	0,9	13	
	DRS100M4	3	AT422	T21D	1,53	11	
	DRS100LC4	4	AT422	T21D	1,6	12	
	DRS112M4	4	AT422	T21D	1,6	12	
	DRS132S4	5,5	AT541	T41	2	6	
	DRS132M4	7,5	AT541	T41	2,4	8	
	DRS132MC4	9,2	AT541	T41	2,5	10	
	DRS160S4	9,2	AT541	T41	2,5	10	
	DRS160M4	11	AT541	T41	2,5	13	
	DRS160MC4	15	AT542	T41D	4,2	8	
	DRS180S4	15	AT542	T41D	4.2	8	

		P_m [kW]				Sn [%]	
R97	DRS80M4	1.1	AT312	T11D	0.72	15	
	DRS90M4	1.5	AT421	T21	0.85	9	
	DRS90L4	2.2	AT421	T21	0.9	13	
	DRS100M4	3	AT422	T21D	1.53	11	
	DRS100LC4	4	AT422	T21D	1.6	12	
	DRS112M4	4	AT422	T21D	1.6	12	
	DRS132S4	5.5	AT541	T41	2	6	
	DRS132M4	7.5	AT541	T41	2.4	8	
	DRS132MC4	9.2	AT541	T41	2.5	10	
	DRS160S4	9.2	AT541	T41	2.5	10	
	DRS160M4	11	AT541	T41	2.5	13	
	DRS160MC4	15	AT542	T41D	4.2	8	
	DRS180S4	15	AT542	T41D	4.2	8	
	DRS180M4	18.5	AT542	T41D	4.3	10	
	DRS180L4	22	AT542	T41D	4.3	14	
R107	DRS90L4	2.2	AT421	T21	0.9	13	
	DRS100M4	3	AT422	T21D	1.53	11	
	DRS100LC4	4	AT422	T21D	1.6	12	
	DRS112M4	4	AT422	T21D	1.6	12	
	DRS132S4	5.5	AT541	T41	2	6	→ 214ff
	DRS132M4	7.5	AT541	T41	2.4	8	→ 217ff
	DRS132MC4	9.2	AT541	T41	2.5	10	
	DRS160S4	9.2	AT541	T41	2.5	10	
	DRS160M4	11	AT541	T41	2.5	13	
	DRS160MC4	15	AT542	T41D	4.2	8	
	DRS180S4	15	AT542	T41D	4.2	8	
	DRS180M4	18.5	AT542	T41D	4.3	10	
	DRS180L4	22	AT542	T41D	4.3	14	
R137	DRS90L4	2.2	AT421	T21	0.9	13	
	DRS100M4	3	AT422	T21D	1.53	11	
	DRS100LC4	4	AT422	T21D	1.6	12	
	DRS112M4	4	AT422	T21D	1.6	12	
	DRS132S4	5.5	AT541	T41	2	6	
	DRS132M4	7.5	AT541	T41	2.4	8	
	DRS132MC4	9.2	AT541	T41	2.5	10	
	DRS160S4	9.2	AT541	T41	2.5	10	
	DRS160M4	11	AT541	T41	2.5	13	
	DRS160MC4	15	AT542	T41D	4.2	8	
	DRS180S4	15	AT542	T41D	4.2	8	
	DRS180M4	18.5	AT542	T41D	4.3	10	
	DRS180L4	22	AT542	T41D	4.3	14	

		P_m [kW]				Sn [%]	
R147	DRS132M4	7.5	AT541	T41	2.4	8	
	DRS132MC4	9.2	AT541	T41	2.5	10	
	DRS160S4	9.2	AT541	T41	2.5	10	
	DRS160M4	11	AT541	T41	2.5	13	
	DRS160MC4	15	AT542	T41D	4.2	8	
	DRS180S4	15	AT542	T41D	4.2	8	→ 214ff
	DRS180M4	18.5	AT542	T41D	4.3	10	
	DRS180L4	22	AT542	T41D	4.3	14	→ 217ff
R167	DRS160M4	11	AT541	T41	2.5	13	
	DRS160MC4	15	AT542	T41D	4.2	8	
	DRS180S4	15	AT542	T41D	4.2	8	
	DRS180M4	18.5	AT542	T41D	4.3	10	
	DRS180L	22	AT542	T41D	4.3	14	

8.2.2 R..AT/ DRE..4

		P_m [kW]				Sn [%]	
R67	DRE80M4	0.75	AT312	T11D	0.7	11	
	DRE90M4	1.1	AT312	T11D	0.72	15	
	DRE90L4	1.5	AT321	T21	0.85	9	
	DRE100M4	2.2	AT321	T21	0.9	13	
	DRE100LC4	3	AT322	T21D	1.53	11	
R77	DRE80M4	0.75	AT312	T11D	0.7	11	
	DRE90M4	1.1	AT312	T11D	0.72	15	
	DRE90L4	1.5	AT421	T21	0.85	9	
	DRE100M4	2.2	AT421	T21	0.9	13	
	DRE100LC4	3	AT422	T21D	1.53	11	
	DRE112M4	3	AT422	T21D	1.53	11	
	DRE132S4	4	AT422	T21D	1.6	12	→ 214ff
R87	DRE90M4	1.1	AT312	T11D	0.72	15	→ 217ff
	DRE90L4	1.5	AT421	T21	0.85	9	
	DRE100M4	2.2	AT421	T21	0.9	13	
	DRE100LC4	3	AT422	T21D	1.53	11	
	DRE112M4	3	AT422	T21D	1.53	11	
	DRE132S4	4	AT422	T21D	1.6	12	
	DRE132M4	5.5	AT541	T41	2	6	
	DRE132MC4	7.5	AT541	T41	2.4	8	
	DRE160M4	9.2	AT541	T41	2.5	10	
	DRE160MC4	11	AT541	T41	2.5	13	
	DRE180S4	11	AT541	T41	2.5	13	
	DRE180M4	15	AT542	T41D	4.2	8	

		P_m [kW]				Sn [%]	
R97	DRE90M4	1.1	AT312	T11D	0.72	15	
	DRE90L4	1.5	AT421	T21	0.85	9	
	DRE100M4	2.2	AT421	T21	0.9	13	
	DRE100LC4	3	AT422	T21D	1.53	11	
	DRE112M4	3	AT422	T21D	1.53	11	
	DRE132S4	4	AT422	T21D	1.6	12	
	DRE132M4	5.5	AT541	T41	2	6	
	DRE132MC4	7.5	AT541	T41	2.4	8	
	DRE160M4	9.2	AT541	T41	2.5	10	
	DRE160MC4	11	AT541	T41	2.5	13	
	DRE180S4	11	AT541	T41	2.5	13	
	DRE180M4	15	AT542	T41D	4.2	8	
	DRE180L4	18.5	AT542	T41D	4.3	10	
R107	DRE100M4	2.2	AT421	T21	0.9	13	
	DRE100LC4	3	AT422	T21D	1.53	11	
	DRE112M4	3	AT422	T21D	1.53	11	
	DRE132S4	4	AT422	T21D	1.6	12	
	DRE132M4	5.5	AT541	T41	2	6	
	DRE132MC4	7.5	AT541	T41	2.4	8	
	DRE160M4	9.2	AT541	T41	2.5	10	
	DRE160MC4	11	AT541	T41	2.5	13	
	DRE180S4	11	AT541	T41	2.5	13	→ 214ff
	DRE180M4	15	AT542	T41D	4.2	8	→ 217ff
	DRE180L4	18.5	AT542	T41D	4.3	10	
R137	DRE100M4	2.2	AT421	T21	0.9	13	
	DRE100LC4	3	AT422	T21D	1.53	11	
	DRE112M4	3	AT422	T21D	1.53	11	
	DRE132S4	4	AT422	T21D	1.6	12	
	DRE132M4	5.5	AT541	T41	2	6	
	DRE132MC4	7.5	AT541	T41	2.4	8	
	DRE160M4	9.2	AT541	T41	2.5	10	
	DRE160MC4	11	AT541	T41	2.5	13	
	DRE180S44	11	AT541	T41	2.5	13	
	DRE180M4	15	AT542	T41D	4.2	8	
	DRE180L4	18.5	AT542	T41D	4.3	10	
R147	DRE132MC4	7.5	AT541	T41	2.4	8	
	DRE160M4	9.2	AT541	T41	2.5	10	
	DRE160MC4	11	AT541	T41	2.5	13	
	DRE180S4	11	AT541	T41	2.5	13	
	DRE180M4	15	AT542	T41D	4.2	8	
	DRE180L4	18.5	AT542	T41D	4.3	10	
R167	DRE160MC4	11	AT541	T41	2.5	13	
	DRE180S4	11	AT541	T41	2.5	13	
	DRE180M4	15	AT542	T41D	4.2	8	
	DRE180L4	18.5	AT542	T41D	4.3	10	

8.2.3 R..AT/ DRP..4

		P_m [kW]				Sn [%]	
R67	DRP90M4	0.75	AT312	T11D	0.7	11	
	DRP90L4	1.1	AT312	T11D	0.72	15	
	DRP100M4	1.5	AT321	T21	0.85	9	
	DRP100L4	2.2	AT321	T21	0.9	13	
R77	DRP90M4	0.75	AT312	T11D	0.7	11	
	DRP90L4	1.1	AT312	T11D	0.72	15	
	DRP100M4	1.5	AT421	T21	0.85	9	
	DRP100L4	2.2	AT421	T21	0.9	13	
	DRP112M4	3	AT422	T21D	1.53	11	
	DRP132M4	4	AT422	T21D	1.6	12	
R87	DRP90L4	1.1	AT312	T11D	0.72	15	
	DRP100M4	1.5	AT421	T21	0.85	9	
	DRP100L4	2.2	AT421	T21	0.9	13	
	DRP112M4	3	AT422	T21D	1.53	11	
	DRP132M4	4	AT422	T21D	1.6	12	
	DRP132MC4	5.5	AT541	T41	2	6	
	DRP160S4	5.5	AT541	T41	2	6	
	DRP160M4	7.5	AT541	T41	2.4	8	
	DRP160MC4	9.2	AT541	T41	2.5	10	
	DRP180S4	9.2	AT541	T41	2.5	10	
	DRP180M4	11	AT541	T41	2.5	13	
	DRP180L4	15	AT542	T41D	4.2	8	→ 214ff
R97	DRP90L4	1.1	AT312	T11D	0.72	15	→ 217ff
	DRP100M4	1.5	AT421	T21	0.85	9	
	DRP100L4	2.2	AT421	T21	0.9	13	
	DRP112M4	3	AT422	T21D	1.53	11	
	DRP132M4	4	AT422	T21D	1.6	12	
	DRP132MC4	5.5	AT541	T41	2	6	
	DRP160S4	5.5	AT541	T41	2	6	
	DRP160M4	7.5	AT541	T41	2.4	8	
	DRP160MC4	9.2	AT541	T41	2.5	10	
	DRP180S4	9.2	AT541	T41	2.5	10	
	DRP180M4	11	AT541	T41	2.5	13	
	DRP180L4	15	AT542	T41D	4.2	8	
R107	DRP100L4	2.2	AT421	T21	0.9	13	
	DRP112M4	3	AT422	T21D	1.53	11	
	DRP132M4	4	AT422	T21D	1.6	12	
	DRP132MC4	5.5	AT541	T41	2	6	
	DRP160S4	5.5	AT541	T41	2	6	
	DRP160M4	7.5	AT541	T41	2.4	8	
	DRP160MC4	9.2	AT541	T41	2.5	10	
	DRP180S4	9.2	AT541	T41	2.5	10	
	DRP180M4	11	AT541	T41	2.5	13	
	DRP180L4	15	AT542	T41D	4.2	8	

		P_m [kW]				Sn [%]	
R137	DRP100L4	2.2	AT421	T21	0.9	13	
	DRP112M4	3	AT422	T21D	1.53	11	
	DRP132M4	4	AT422	T21D	1.6	12	
	DRP132MC4	5.5	AT541	T41	2	6	
	DRP160S44	5.5	AT541	T41	2	6	
	DRP160M4	7.5	AT541	T41	2.4	8	
	DRP160MC4	9.2	AT541	T41	2.5	10	
	DRP180S4	9.2	AT541	T41	2.5	10	→ 214ff
	DRP180M4	11	AT541	T41	2.5	13	→ 217ff
	DRP180L4	15	AT542	T41D	4.2	8	
R147	DRP160M4	7.5	AT541	T41	2.4	8	
	DRP160MC4	9.2	AT541	T41	2.5	10	
	DRP180S4	9.2	AT541	T41	2.5	10	
	DRP180M4	11	AT541	T41	2.5	13	
	DRP180L4	15	AT542	T41D	4.2	8	
R167	DRP180M4	11	AT541	T41	2.5	13	
	DRP180L4	15	AT542	T41D	4.2	8	

8.2.4 R..AT/ DRS..2

		P_m [kW]				Sn [%]	
R67	DRS71M2	0.55	AT311	T11	0.19	3	
	DRS80S2	0.75	AT311	T11	0.22	4.5	
	DRS80M2	1.1	AT311	T11	0.27	6	
	DRS90M2	1.5	AT311	T11	0.29	8.5	
	DRS100M2	3	AT311	T11	0.4	12	
	DRS100LC2	4	AT312	T11D	0.52	10	
R77	DRS71M2	0.55	AT311	T11	0.19	3	
	DRS80S2	0.75	AT311	T11	0.22	4.5	
	DRS80M2	1.1	AT311	T11	0.27	6	
	DRS90M2	1.5	AT311	T11	0.29	8.5	→ 214ff
	DRS100M2	3	AT311	T11	0.4	12	→ 217ff
	DRS100LC2	4	AT312	T11D	0.52	10	
	DRS132M2	9.2	AT421	T21	0.65	8.5	
R87	DRS90M2	1.5	AT311	T11	0.29	8.5	
	DRS100M2	3	AT311	T11	0.4	12	
	DRS100LC2	4	AT312	T11D	0.52	10	
	DRS132M2	9.2	AT421	T21	0.65	8.5	
R97	DRS90M2	1.5	AT311	T11	0.29	8.5	
	DRS100M2	3	AT311	T11	0.4	12	
	DRS100LC2	4	AT312	T11D	0.52	10	
	DRS132M2	9.2	AT421	T21	0.65	8.5	

		P_m [kW]				Sn [%]	
R107	DRS100M2	3	AT311	T11	0.4	12	
	DRS100LC2	4	AT312	T11D	0.52	10	→ 214ff
	DRS132M2	9.2	AT421	T21	0.65	8.5	→ 217ff
R137	DRS132M2	9.2	AT421	T21	0.65	8.5	
R147	DRS132M2	9.2	AT421	T21	0.65	8.5	

8.2.5 R..AT/ DRE..2

		P_m [kW]				Sn [%]	
R67	DRE80M2	0.75	AT311	T11	0.22	4.5	
	DRE90M2	1.5	AT311	T11	0.29	8.5	
	DRE100M2	2.2	AT311	T11	0.31	11.5	
	DRE100L2	3	AT311	T11	0.4	12	
R77	DRE80M2	0.75	AT311	T11	0.22	4.5	
	DRE90M2	1.5	AT311	T11	0.29	8.5	
	DRE100M2	2.2	AT311	T11	0.31	11.5	
	DRE100L2	3	AT311	T11	0.4	12	
	DRE132M2	7.5	AT421	T21	0.6	8	
	DRE132MC2	9.2	AT421	T21	0.65	8.5	
R87	DRE90M2	1.5	AT311	T11	0.29	8.5	
	DRE100M2	2.2	AT311	T11	0.31	11.5	
	DRE100L2	3	AT311	T11	0.4	12	→ 214ff
	DRE132M2	7.5	AT421	T21	0.6	8	→ 217ff
	DRE132MC2	9.2	AT421	T21	0.65	8.5	
R97	DRE90M2	1.5	AT311	T11	0.29	8.5	
	DRE100M2	2.2	AT311	T11	0.31	11.5	
	DRE100L2	3	AT311	T11	0.4	12	
	DRE132M2	7.5	AT421	T21	0.6	8	
	DRE132MC2	9.2	AT421	T21	0.65	8.5	
R107	DRE100L2	3	AT311	T11	0.4	12	
	DRE132M2	7.5	AT421	T21	0.6	8	
	DRE132MC2	9.2	AT421	T21	0.65	8.5	
R137	DRE132M2	7.5	AT421	T21	0.6	8	
	DRE132MC2	9.2	AT421	T21	0.65	8.5	
R147	DRE132M2	7.5	AT421	T21	0.6	8	
	DRE132MC2	9.2	AT421	T21	0.65	8.5	

8.2.6 R..AT/ DRP..2

		P_m [kW]				Sn [%]	
R67	DRP80M2	0.75	AT311	T11	0.22	4.5	
	DRP90M2	1.1	AT311	T11	0.27	6	
	DRP100M2	2.2	AT311	T11	0.31	11.5	
	DRP100LC2	3	AT311	T11	0.4	12	
R77	DRP80M2	0.75	AT311	T11	0.22	4.5	
	DRP90M2	1.1	AT311	T11	0.27	6	→ 214ff
	DRP100M2	2.2	AT311	T11	0.31	11.5	→ 217ff
	DRP100LC2	3	AT311	T11	0.4	12	
R87	DRP100M2	2.2	AT311	T11	0.31	11.5	
	DRP100LC2	3	AT311	T11	0.4	12	
R97	DRP100M2	2.2	AT311	T11	0.31	11.5	
	DRP100LC2	3	AT311	T11	0.4	12	
R107	DRP100LC	3	AT311	T11	0.4	12	

8.3 R(X).. AD.. [kW]

i	n_a [1/min]	M_{amax}	P_e [kW]	F_{Ra} 1) [N]	F_{Re} [N]	φ (/R)	⚠				m [kg]	
RX57 AD.. , n_e = 1400 1/min												**69 Nm**
5.50*	255	37	1.0	3120	515	-	-					
5.07	276	34	1.0	3050	645	-	-					
4.35	322	61	2.1	2690	1110	-	-					
3.79	369	58	2.3	2560	1130	-	-	**RX**	**57**	**AD2**	**13**	→ 220
3.55*	394	55	2.3	2520	1150	-	-	**RXF**	**57**	**AD2**	**15**	
3.14	446	65	3.1	2320	990	-	-					
2.91	481	49	2.5	2370	1190	-	-					
2.64*	530	69	3.9	1810	880	-	-					
2.37	591	69	4.4	1500	1860	-	-					
2.04	686	69	5.1	1070	1810	-	-					
1.92*	729	69	5.4	880	1780	-	-	**RX**	**57**	**AD3**	**16**	→ 220
1.65	847	69	6.3	430	1720	-	-	**RXF**	**57**	**AD3**	**18**	
1.48	948	68	6.9	112	1660	-	-					
1.30	1075	63	7.2	132	1710	-	-					
RX67 AD.. , n_e = 1400 1/min												**134 Nm**
6.07	231	41	1.0	4020	630	-	-					
5.18	270	75	2.2	3580	1090	-	-					
4.53	309	71	2.4	3420	1120	-	-	**RX**	**67**	**AD2**	**15**	→ 220
4.30*	326	69	2.4	3370	1140	-	-	**RXF**	**67**	**AD2**	**19**	
3.77	371	87	3.5	3090	880	-	-					
3.20*	438	100	4.7	2800	1700	-	-					
2.89	485	105	5.4	2640	1610	-	-					
2.54	551	118	7.0	2000	1400	-	-					
2.40*	583	123	7.7	1530	1300	-	-	**RX**	**67**	**AD3**	**19**	→ 220
2.04	685	114	8.4	1260	1310	-	-	**RXF**	**67**	**AD3**	**23**	
1.86	754	108	8.7	1180	1340	-	-					
1.61	870	99	9.2	1080	1380	-	-					
1.40*	1000	90	9.6	1030	1420	-	-					
RX77 AD.. , n_e = 1400 1/min												**215 Nm**
8.00*	175	54	1.0	6350	520	-	-					
7.47	188	50	1.0	6220	655	-	-					
6.41	218	101	2.4	5610	1050	-	-	**RX**	**77**	**AD2**	**25**	→ 220
5.63	249	107	2.9	5320	970	-	-	**RXF**	**77**	**AD2**	**27**	
5.35*	262	101	2.8	5250	1020	-	-					
4.73	296	123	3.9	4900	1800	-	-					
4.04*	347	143	5.3	4500	1580	-	-	**RX**	**77**	**AD3**	**29**	→ 220
3.70	378	143	5.8	4350	1560	-	-	**RXF**	**77**	**AD3**	**31**	
3.25*	431	182	8.4	3200	3160	-	-					
3.08*	455	193	9.4	2560	3040	-	-					
2.70	519	215	11.9	1110	2780	-	-					
2.43	576	215	13.2	510	2670	-	-	**RX**	**77**	**AD4**	**35**	→ 220
2.13	657	200	14.0	435	2720	-	-	**RXF**	**77**	**AD4**	**37**	
1.88*	745	187	14.9	335	2750	-	-					
1.67	840	173	15.5	315	2800	-	-					
1.42	984	155	16.3	315	2870	-	-					
RX87 AD.. , n_e = 1400 1/min												**405 Nm**
8.65	162	139	2.4	7890	1070	-	-					
7.63	183	145	2.9	7510	1020	-	-	**RX**	**87**	**AD2**	**41**	→ 220
7.20*	194	136	2.8	7390	1060	-	-	**RXF**	**87**	**AD2**	**46**	
6.45	217	192	4.5	6850	1640	-	-					
5.56*	252	225	6.1	6320	1410	-	-	**RX**	**87**	**AD3**	**45**	→ 220
5.07	276	215	6.4	6140	1440	-	-	**RXF**	**87**	**AD3**	**50**	
4.50*	311	290	9.7	5500	3010	-	-	**RX**	**87**	**AD4**	**52**	→ 220
3.78	370	305	12.1	5030	2850	-	-	**RXF**	**87**	**AD4**	**56**	
3.48	403	405	17.4	2730	5330	-	-					
3.09	454	405	19.6	1950	5250	-	-					
2.76*	507	405	22	1200	5160	-	-					
2.48	564	405	24	470	5060	-	-	**RX**	**87**	**AD5**	**66**	→ 220
2.15	650	385	27	42	5050	-	-	**RXF**	**87**	**AD5**	**71**	
1.93	726	355	28	185	5150	-	-					
1.60*	875	315	29	74	5230	-	-					
1.39	1005	290	31	74	5310	-	-					
RX97 AD.. , n_e = 1400 1/min												**595 Nm**
8.23	170	225	4.2	9560	1710	-	-					
7.16*	196	260	5.5	8950	1520	-	-	**RX**	**97**	**AD3**	**70**	→ 220
6.56	214	300	6.9	8500	1260	-	-	**RXF**	**97**	**AD3**	**78**	

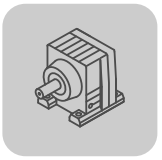

i	n_a [1/min]	M_{amax}	P_e [kW]	F_{Ra} 1) [N]	F_{Re} [N]	φ (/R)	⚠				m [kg]	
5.79	242	420	10.9	7630	2770	-	-	**RX**	**97**	**AD4**	**75**	→ 220
4.91	285	395	12.0	7220	2820	-	-	**RXF**	**97**	**AD4**	**84**	
4.52	309	595	19.7	6180	4980	-	-					
4.04	346	595	22	5380	4900	-	-					
3.64*	385	595	24	4530	4810	-	-					
3.30	425	595	27	3730	4730	-	-					
2.92	479	595	30	2810	4620	-	-	**RX**	**97**	**AD5**	**92**	→ 220
2.64	530	595	34	1980	4510	-	-	**RXF**	**97**	**AD5**	**100**	
2.24*	625	595	40	495	4280	-	-					
1.96	716	570	43	19	4260	-	-					
1.64	856	505	46	51	4390	-	-					
1.42	988	455	48	132	7450	-	-	**RX**	**97**	**AD6**	**105**	→ 220
								RXF	**97**	**AD6**	**115**	
RX107 AD.. , n_e = 1400 1/min												**830 Nm**
6.63*	211	460	10.4	9700	2710	-	-	**RX**	**107**	**AD4**	**110**	→ 220
5.61	250	455	12.2	9080	2660	-	-	**RXF**	**107**	**AD4**	**125**	
5.19	270	695	20	7850	4730	-	-					
4.65	301	695	22	7450	4660	-	-					
4.20*	333	830	30	6420	3800	-	-	**RX**	**107**	**AD5**	**125**	→ 220
3.81	367	830	32	5550	3610	-	-	**RXF**	**107**	**AD5**	**140**	
3.38	414	830	37	4490	3360	-	-					
3.07	456	830	40	3600	6560	-	-					
2.64*	530	830	47	2160	6350	-	-					
2.30	608	830	54	900	6150	-	-	**RX**	**107**	**AD6**	**135**	→ 220
1.95	716	730	56	1260	6410	-	-	**RXF**	**107**	**AD6**	**155**	
1.71	820	640	56	1840	6700	-	-					
1.44	969	540	56	2610	7070	-	-					
R27 AD.. , n_e = 1400 1/min												**130 Nm**
135.09	10	130	0.17	4230	750	-	-					
123.91	11	130	0.18	4230	750	-	-					
105.49	13	130	0.21	4230	745	-	-					
90.96	15	130	0.24	4230	740	-	-					
84.78	17	130	0.26	4230	740	-	-					
74.11	19	130	0.29	4230	735	-	-					
69.47	20	130	0.31	4180	735	-	-					
61.30	23	130	0.35	3980	725	-	-	**R**	**27**	**AD1**	**6.0**	→ 220
55.87	25	130	0.38	3840	565	-	-	**RF**	**27**	**AD1**	**5.9**	
48.17	29	130	0.43	3630	550	-	-					
44.90	31	130	0.47	3530	540	-	-					
39.25	36	130	0.53	3350	520	-	-					
36.79	38	130	0.56	3260	505	-	-					
32.47	43	130	0.64	3100	485	-	-					
28.78	49	130	0.72	2950	460	-	-					
24.47	57	130	0.84	2760	425	-	-					
28.37	49	130	0.72	2940	1080	-	-					
26.09	54	130	0.78	2840	1060	-	-					
22.32	63	130	0.91	2660	1020	-	-					
19.35	72	130	1.0	2510	1550	-	-					
18.08	77	130	1.1	2440	1540	-	-					
15.63	90	130	1.3	2290	1520	-	-					
13.28*	105	130	1.5	2140	1510	-	-					
11.86	118	129	1.7	1980	1490	-	-					
10.13	138	122	1.8	1890	1490	-	-	**R**	**27**	**AD2**	**6.9**	→ 220
9.41	149	122	2.0	900	1150	-	-	**RF**	**27**	**AD2**	**6.8**	
8.16	172	116	2.2	870	1160	-	-					
7.63*	184	112	2.2	900	1170	-	-					
6.59	212	106	2.4	880	1170	-	-					
5.60*	250	99	2.7	880	1190	-	-					
5.00*	280	95	2.9	860	1180	-	-					
4.27	328	87	3.1	920	1200	-	-					
4.00*	350	85	3.2	900	1200	-	-					
3.37	415	79	3.6	900	1190	-	-					

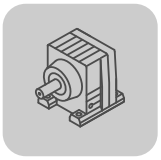

R..
R(X).. AD.. [kW]

i	n_a [1/min]	M_{amax}	P_e [kW]	F_{Ra} [N] 1)	F_{Re} [N]	φ (/R)	⚠				m [kg]	
R37 AD.. , n_e = 1400 1/min												**200 Nm**
134.82	10	200	0.25	4940	675	8	-					
123.66	11	200	0.27	4940	665	8	-					
105.28	13	200	0.31	4940	655	8	-					
90.77	15	200	0.36	4940	640	8	-					
84.61	17	200	0.38	4940	635	8	-	**R**	**37**	**AD1**	**12**	→ 220
73.96	19	200	0.44	4940	615	8	-	**RF**	**37**	**AD1**	**13**	
69.33	20	200	0.47	4940	605	8	-					
61.18	23	200	0.53	4940	590	8	-					
55.76	25	200	0.57	4940	355	9	-					
48.08	29	200	0.66	4940	1510	9	-					
44.81	31	200	0.71	4940	1490	9	-					
39.17	36	200	0.81	4760	1460	9	-					
36.72	38	200	0.86	4540	1440	9	-	**R**	**37**	**AD2**	**13**	→ 220
32.40	43	200	0.97	4120	1390	9	-	**RF**	**37**	**AD2**	**14**	
28.73	49	200	1.1	3740	1650	9	-					
24.42	57	200	1.3	3240	1630	9	-					
28.32	49	189	1.0	4000	490	7	-					
26.03	54	173	1.0	4180	620	7	-					
22.27	63	200	1.4	2970	1380	7	-					
19.31	73	200	1.6	2570	1360	7	-					
18.05	78	200	1.7	2390	1350	8	-					
15.60	90	200	2.0	2010	1320	8	-					
13.25	106	190	2.2	1880	1320	8	-					
11.83	118	183	2.4	1810	1320	8	-					
10.11	139	170	2.6	1820	1330	8	-	**R**	**37**	**AD2**	**13**	→ 220
9.47	148	167	2.7	1760	1320	8	-	**RF**	**37**	**AD2**	**14**	
7.97	176	156	3.0	1720	1310	8	-					
6.67	210	144	3.3	1000	920	12	-					
5.67	247	142	3.8	760	890	12	-					
5.06	277	135	4.0	790	890	13	-					
4.32	324	126	4.4	820	900	13	-					
4.05	346	121	4.5	880	910	13	-					
3.41	411	107	4.8	1070	950	14	-					
R47 AD.. , n_e = 1400 1/min												**300 Nm**
176.88	7.9	300	0.29	5420	1790	7	-					
162.94	8.6	300	0.31	5420	1780	7	-					
139.99	10	300	0.36	5420	1780	7	-					
121.87	11	300	0.41	5420	1780	7	-					
114.17	12	300	0.43	5420	1770	7	-					
100.86	14	300	0.49	5420	1770	7	-					
93.68	15	300	0.52	5420	1760	7	-					
84.90	16	300	0.58	5420	1760	7	-					
76.23	18	300	0.64	5420	1760	7	-					
68.54	20	300	0.70	5420	1450	8	-	**R**	**47**	**AD2**	**17**	→ 220
64.21	22	300	0.74	5420	1440	8	-	**RF**	**47**	**AD2**	**17**	
56.73	25	300	0.84	5420	1410	8	-					
52.69	27	300	0.90	5350	1380	8	-					
47.75	29	300	0.99	5140	1360	8	-					
42.87	33	300	1.1	4930	1640	8	-					
36.93	38	300	1.3	4630	1620	8	-					
34.73	40	300	1.4	4520	1620	8	-					
29.88	47	300	1.6	4240	1600	8	-					
26.70	52	300	1.8	4050	1580	8	-					
23.59	59	300	2.0	3840	1570	8	-					

i	n_a [1/min]	M_{amax}	P_e [kW]	F_{Ra} 1) [N]	F_{Re} [N]	φ (/R)	⚠				m [kg]	
33.79	41	225	1.0	4740	525	7	-					
31.12	45	205	1.0	4660	670	7	-					
26.74	52	300	1.7	4050	1270	7	-					
23.28	60	300	2.0	3820	1250	7	-					
21.81	64	300	2.1	3710	1240	7	-					
19.27	73	295	2.3	3530	1230	7	-					
17.89	78	290	2.5	3390	1220	7	-					
16.22	86	275	2.6	3350	1240	7	-					
14.56	96	265	2.8	3230	1240	7	-					
12.54	112	250	3.0	3080	1240	7	-	**R**	**47**	**AD2**	**16**	→ 220
11.79	119	245	3.2	3020	1240	7	-	**RF**	**47**	**AD2**	**17**	
10.15	138	230	3.4	2880	1240	7	-					
9.07	154	220	3.7	2780	1230	8	-					
8.01	175	205	3.9	2690	1250	8	-					
7.76*	181	163	3.2	2720	1080	10	-					
6.96	201	159	3.5	2620	1070	10	-					
6.00	233	156	4.0	2470	1040	10	-					
5.64*	248	155	4.2	2410	1020	10	-					
4.85	288	150	4.7	2280	1000	10	-					
4.34	323	146	5.1	2190	970	11	-					
3.83	365	144	5.7	2080	1970	11	-	**R**	**47**	**AD3**	**20**	→ 220
								RF	**47**	**AD3**	**20**	
R57 AD.. , n_e = 1400 1/min												**450 Nm**
186.89	7.5	450	0.40	7100	1700	7	-					
172.17	8.1	450	0.43	7100	1690	7	-					
147.92	9.5	450	0.50	7100	1670	7	-					
128.77	11	450	0.57	7100	1650	7	-					
120.63	12	450	0.60	7100	1640	7	-					
106.58	13	450	0.68	7100	1620	7	-					
98.99	14	450	0.73	7100	1590	7	-					
89.71	16	450	0.80	7100	1580	7	-					
80.55	17	450	0.89	7100	1550	7	-	**R**	**57**	**AD2**	**22**	
69.23	20	450	1.0	7100	1020	7	-	**RF**	**57**	**AD2**	**26**	→ 220
64.85	22	450	1.1	6980	1570	8	-	**RM**	**57**	**AD2**	**38**	
57.29	24	450	1.2	6630	1560	8	-					
53.22	26	450	1.3	6430	1540	8	-					
48.23	29	450	1.5	6170	1540	8	-					
43.30	32	450	1.6	5900	1520	8	-					
37.30*	38	450	1.9	5530	1500	8	-					
35.07	40	450	2.0	5390	1490	8	-					
30.18	46	450	2.3	5040	1460	8	-					
26.97	52	450	2.6	4800	1440	8	-					
26.31	53	420	2.4	4860	1100	6	-					
24.99*	56	410	2.5	4780	1120	6	-					
21.93	64	450	3.1	4370	1000	7	-	**R**	**57**	**AD2**	**21**	
18.60*	75	450	3.7	4050	960	7	-	**RF**	**57**	**AD2**	**25**	→ 220
16.79	83	450	4.1	3860	920	7	-	**RM**	**57**	**AD2**	**37**	
14.77*	95	435	4.5	3690	930	7	-					
13.95*	100	430	4.7	3610	1940	7	-					
11.88	118	405	5.2	3430	1930	7	-					
10.79	130	390	5.5	3330	1930	7	-					
9.35	150	370	6.0	3180	1920	7	-					
9.06	155	335	5.6	2900	1580	9	-	**R**	**57**	**AD3**	**25**	
7.97	176	355	6.8	2020	1460	9	-	**RF**	**57**	**AD3**	**28**	→ 220
7.53	186	350	7.0	1950	1460	9	-	**RM**	**57**	**AD3**	**40**	
6.41	218	335	7.9	1770	1420	9	-					
5.82	240	320	8.3	1820	1430	10	-					
5.05	277	305	9.2	1730	1400	10	-					
4.39	319	280	9.6	1900	1440	10	-					

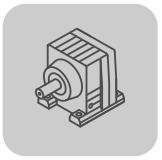

R..
R(X).. AD.. [kW]

i	n_a [1/min]	M_{amax}	P_e [kW]	F_{Ra} 1) [N]	F_{Re} [N]	φ (/R)	⚠				m [kg]	
R67 AD.. , n_e = 1400 1/min												**600 Nm**
199.81	7.0	600	0.49	7560	1510	6	-					
184.07	7.6	600	0.53	7560	1500	6	-					
158.14	8.8	600	0.61	7560	1480	6	-					
137.67	10	600	0.70	7560	1450	6	-					
128.97	11	600	0.74	7560	1440	6	-					
113.94	12	600	0.84	7560	1410	6	-					
105.83	13	600	0.90	7560	1380	6	-					
95.91	15	600	0.99	7560	1360	6	-					
86.11	16	600	1.1	7560	1640	6	-	**R**	**67**	**AD2**	**29**	
74.17	19	600	1.3	7560	1620	7	-	**RF**	**67**	**AD2**	**32**	→ 220
69.75	20	600	1.4	7560	1620	7	-	**RM**	**67**	**AD2**	**48**	
61.26	23	600	1.5	7560	1450	7	-					
56.89	25	600	1.6	7560	1440	7	-					
51.56	27	600	1.8	7560	1420	7	-					
46.29	30	600	2.0	7560	1410	7	-					
39.88*	35	580	2.3	7790	1400	7	-					
37.50	37	570	2.4	7900	1390	7	-					
32.27	43	540	2.6	8210	1390	7	-					
28.83	49	520	2.8	8400	1380	7	-					
28.13	50	410	2.2	9270	1150	6	-	**R**	**67**	**AD2**	**28**	
26.72	52	400	2.3	9340	1160	6	-	**RF**	**67**	**AD2**	**31**	→ 220
23.44	60	560	3.6	8010	810	6	-	**RM**	**67**	**AD2**	**47**	
19.89	70	600	4.6	7560	1710	6	-					
17.95	78	590	5.0	7330	1700	6	-					
15.79	89	560	5.4	7130	1720	6	-					
14.91	94	550	5.6	6980	1720	6	-					
12.70	110	520	6.2	6640	1700	6	-					
11.54	121	500	6.6	6500	1700	7	-					
10.00	140	470	7.1	6220	1700	7	-	**R**	**67**	**AD3**	**31**	
8.70*	161	440	7.7	5960	1710	7	-	**RF**	**67**	**AD3**	**34**	→ 220
7.79	180	380	7.4	5830	1280	8	-	**RM**	**67**	**AD3**	**50**	
7.36*	190	370	7.6	5790	1290	8	-					
6.27	223	330	8.0	5590	1360	9	-					
5.70	246	310	8.2	5450	1400	9	-					
4.93	284	290	8.9	5210	1400	9	-					
4.29	326	270	9.5	5000	1410	10	-					
R77 AD.. , n_e = 1400 1/min												**820 Nm**
195.24*	7.2	820	0.68	9920	1300	6	-					
166.59	8.4	820	0.79	9920	1270	6	-					
145.67	9.6	820	0.90	9920	1240	6	-					
138.39	10	820	0.95	9920	1240	6	-					
121.42	12	820	1.1	9920	1630	6	-					
102.99	14	820	1.3	9920	1610	6	-					
92.97	15	820	1.4	9920	1600	6	-					
81.80	17	820	1.6	9920	1590	6	-					
77.24	18	820	1.7	9920	1590	6	-	**R**	**77**	**AD2**	**35**	
65.77	21	820	2.0	9920	1560	7	-	**RF**	**77**	**AD2**	**41**	→ 220
57.68	24	820	2.2	9920	1380	7	-	**RM**	**77**	**AD2**	**66**	
52.07	27	820	2.4	9920	1370	7	-					
45.81	31	820	2.8	9920	1350	7	-					
43.26	32	820	2.9	9920	1340	7	-					
36.83	38	820	3.4	9920	1290	7	-					
33.47	42	820	3.8	9920	1270	7	-					
29.00	48	820	4.4	9920	1220	7	-					
25.23	55	780	4.8	10100	1210	7	-					
23.37	60	820	5.3	8870	1620	6	-					
21.43	65	820	5.8	8250	1600	6	-					
18.80	74	780	6.3	7980	1630	6	-					
17.82*	79	780	6.6	7620	1600	6	-	**R**	**77**	**AD3**	**37**	
15.60	90	740	7.2	7390	1620	6	-	**RF**	**77**	**AD3**	**43**	→ 220
14.05	100	720	7.8	7050	1590	6	-	**RM**	**77**	**AD3**	**68**	
12.33	114	690	8.5	6740	1580	6	-					
10.88	129	660	9.2	6490	1570	6	-					
9.64	145	630	9.9	6300	1560	7	-					
8.59	163	630	11.1	4110	2970	7	-					
7.74	181	610	11.9	3940	2920	8	-	**R**	**77**	**AD4**	**43**	
6.79	206	580	12.9	3850	2930	8	-	**RF**	**77**	**AD4**	**49**	→ 220
5.99*	234	540	13.6	3990	2970	8	-	**RM**	**77**	**AD4**	**74**	
5.31*	264	510	14.5	3990	2980	8	-					

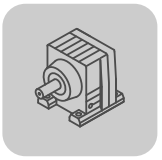

i	n_a [1/min]	M_{amax}	P_e [kW]	F_{Ra} [N] 1)	F_{Re} [N]	φ (/R)	⚠				m [kg]	
R87 AD.. , n_e = 1400 1/min												**1550 Nm**
246.54	5.7	1550	1.0	16900	1570	6	-					
216.54	6.5	1550	1.1	16900	1570	6	-					
205.71	6.8	1550	1.2	16900	1570	6	-					
181.77	7.7	1550	1.4	16900	1540	6	-					
155.34	9.0	1550	1.6	16900	1530	6	-					
142.41	9.8	1550	1.7	16900	1520	6	-					
124.97	11	1550	1.9	16900	1510	6	-					
118.43*	12	1550	2.0	16900	1500	6	-	**R**	**87**	**AD2**	**61**	
103.65	14	1550	2.3	16900	1480	6	-	**RF**	**87**	**AD2**	**68**	→ 📖 220
93.38	15	1550	2.6	16900	1460	6	-	**RM**	**87**	**AD2**	**98**	
81.92	17	1550	3.0	16900	1440	6	-					
72.57	19	1550	3.3	16900	1160	6	-					
63.68*	22	1550	3.8	15800	1130	6	-					
60.35*	23	1550	4.0	15200	1120	6	-					
52.82	27	1550	4.5	13500	1080	6	-					
47.58	29	1550	5.0	12300	1040	7	-					
41.74	34	1550	5.7	16900	1940	7	-					
36.84*	38	1550	6.5	16800	1900	7	-	**R**	**87**	**AD3**	**65**	
32.66*	43	1550	7.3	16000	1850	7	-	**RF**	**87**	**AD3**	**72**	→ 📖 220
27.88	50	1500	8.3	15100	1810	7	-	**RM**	**87**	**AD3**	**100**	
34.40*	41	1360	6.0	11500	1400	5	-	**R**	**87**	**AD3**	**64**	
31.40	45	1280	6.2	11700	1450	5	-	**RF**	**87**	**AD3**	**71**	→ 📖 220
								RM	**87**	**AD3**	**100**	
27.84*	50	1550	8.5	15000	3200	6	-					
23.40	60	1550	10.1	13900	3130	6	-					
21.51	65	1500	10.6	13600	3120	6	-					
19.10	73	1440	11.4	13000	3130	6	-	**R**	**87**	**AD4**	**70**	
17.08*	82	1390	12.4	12600	3130	6	-	**RF**	**87**	**AD4**	**77**	→ 📖 220
15.35	91	1340	13.2	12100	3130	6	-	**RM**	**87**	**AD4**	**105**	
13.33	105	1280	14.6	11600	3110	6	-					
11.93	117	1230	15.6	11200	3100	6	-					
9.90*	141	1180	18.1	10400	3020	6	-					
9.14*	153	1210	20	10500	5360	6	-					
8.22	170	1160	21	10200	5380	7	-	**R**	**87**	**AD5**	**85**	
7.13	196	1070	23	9780	5440	7	-	**RF**	**87**	**AD5**	**92**	→ 📖 220
6.39	219	1020	24	9450	5450	7	-	**RM**	**87**	**AD5**	**120**	
5.30*	264	910	26	8980	5510	7	-					
R97 AD.. , n_e = 1400 1/min												**3000 Nm**
216.28	6.5	3000	2.2	19800	2210	6	-					
186.30	7.5	3000	2.5	19800	2200	6	-					
170.02	8.2	3000	2.8	19800	2180	6	-					
150.78	9.3	3000	3.1	19800	2170	6	-					
126.75	11	3000	3.7	19800	2140	6	-					
116.48	12	3000	4.0	19800	2130	6	-	**R**	**97**	**AD3**	**105**	
103.44	14	3000	4.5	19800	2100	6	-	**RF**	**97**	**AD3**	**125**	→ 📖 220
92.48	15	3000	5.0	19800	2070	6	-	**RM**	**97**	**AD3**	**175**	
83.15	17	3000	5.6	19800	2040	6	-					
72.17	19	3000	6.5	18000	2000	6	-					
65.21	21	3000	7.1	19800	1550	6	-					
59.92	23	3000	7.7	19800	1510	6	-					
53.21	26	3000	8.7	19800	1460	6	-					
47.58	29	3000	9.7	19800	3440	6	-					
42.78	33	3000	10.8	19800	3400	6	-	**R**	**97**	**AD4**	**110**	
37.13	38	3000	12.4	18600	3320	6	-	**RF**	**97**	**AD4**	**130**	→ 📖 220
33.25	42	2890	13.4	17900	3310	6	-	**RM**	**97**	**AD4**	**180**	
27.58	51	2670	14.9	16900	3290	6	-					
32.05	44	2560	12.1	10600	2370	5	-	**R**	**97**	**AD4**	**110**	
27.19	52	2430	13.6	9910	2490	5	-	**RF**	**97**	**AD4**	**125**	→ 📖 220
								RM	**97**	**AD4**	**175**	

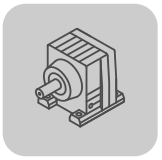

R..
R(X).. AD.. [kW]

i	n_a [1/min]	M_{amax}	P_e [kW]	F_{Ra} 1) [N]	F_{Re} [N]	φ (/R)	⚠					m [kg]	
25.03	56	2830	17.1	15900	5290	5	-						
22.37	63	2720	18.4	15300	5320	5	-						
20.14	70	2610	19.6	14800	5350	5	-						
18.24	77	2500	21	14400	5390	6	-						
16.17	87	2400	22	13800	5410	6	-						
14.62	96	2300	24	13400	5430	6	-	**R**	**97**	**AD5**	**125**		
12.39	113	2190	27	12700	5380	6	-	**RF**	**97**	**AD5**	**145**	→ 220	
10.83	129	2090	29	12100	5380	6	-	**RM**	**97**	**AD5**	**195**		
9.29	151	2030	33	12200	4260	6	-						
8.39	167	2030	37	11700	4140	6	-						
7.12	197	2000	42	10900	3810	6	-						
6.21	225	1890	46	10500	3940	6	-						
5.20	269	1780	52	9850	6870	6	-	**R**	**97**	**AD6**	**140**		
4.50*	311	1630	55	9500	6940	6	M2	**RF**	**97**	**AD6**	**155**	→ 220	
								RM	**97**	**AD6**	**210**		
R107 AD.. , n_e = 1400 1/min													**4300 Nm**
251.15	5.6	4300	2.7	29500	2150	7	-						
229.95	6.1	4300	3.0	29500	2140	7	-						
203.16	6.9	4300	3.3	29500	2130	7	-						
172.34	8.1	4300	3.9	29500	2110	7	-						
158.68	8.8	4300	4.2	29500	2090	7	-						
141.83	9.9	4300	4.7	29500	2070	7	-	**R**	**107**	**AD3**	**165**		
127.68	11	4300	5.2	29500	2040	7	-	**RF**	**107**	**AD3**	**170**	→ 220	
115.63	12	4300	5.8	29500	2020	7	-	**RM**	**107**	**AD3**	**260**		
102.53	14	4300	6.5	29500	1990	7	-						
92.70	15	4300	7.2	29500	1960	7	-						
78.57	18	4300	8.5	29500	1890	7	-						
72.88	19	4300	9.1	29500	1400	7	-						
65.60*	21	4300	10.1	29200	3400	7	-						
59.41	24	4300	11.2	28000	3360	7	-						
52.68	27	4300	12.6	26600	3310	7	-	**R**	**107**	**AD4**	**170**		
47.63	29	4300	13.9	25500	3260	7	-	**RF**	**107**	**AD4**	**175**	→ 220	
40.37*	35	4300	16.4	23800	3150	7	-	**RM**	**107**	**AD4**	**265**		
35.26	40	4300	18.8	22400	3070	7	-						
29.49	47	4300	22	20700	2920	7	-						
30.77	46	4300	21	21100	4810	7	-						
27.58	51	4300	24	20100	4730	7	-						
24.90*	56	4300	26	19200	4600	7	-	**R**	**107**	**AD5**	**180**		
22.62	62	4300	29	18300	4510	7	-	**RF**	**107**	**AD5**	**185**	→ 220	
20.07	70	4300	32	17300	4400	7	-	**RM**	**107**	**AD5**	**270**		
18.21	77	4300	36	16600	4300	7	-						
15.65	89	4300	42	15400	4070	7	-						
13.66	102	4300	48	14400	6890	7	-						
11.59	121	4280	56	13300	6650	7	-						
10.13	138	3740	56	13300	6930	7	-						
8.56	163	3160	56	13200	7280	7	M2	**R**	**107**	**AD6**	**190**		
7.86	178	2900	56	13900	6250	9	-	**RF**	**107**	**AD6**	**200**	→ 220	
6.66	210	2460	56	13500	6650	9	-	**RM**	**107**	**AD6**	**285**		
5.82	240	2150	56	13200	6930	9	-						
4.92	284	2000	61	12500	6950	9	M2						
R137 AD.. , n_e = 1400 1/min													**8000 Nm**
222.60*	6.3	8000	5.6	53400	3730	6	-						
188.45	7.4	8000	6.6	53400	3690	6	-						
174.40*	8.0	8000	7.1	53400	3660	6	-						
156.31	9.0	8000	7.9	53400	3640	6	-						
141.12*	9.9	8000	8.8	53400	3580	6	-						
128.18	11	8000	9.7	53400	3550	6	-	**R**	**137**	**AD4**	**255**		
113.72	12	8000	10.9	53400	3510	6	-	**RF**	**137**	**AD4**	**280**	→ 220	
103.20*	14	8000	12.0	53400	3470	6	-	**RM**	**137**	**AD4**	**390**		
88.70*	16	8000	14.0	53400	3400	6	-						
80.91*	17	8000	15.2	53400	2770	6	-						
73.49	19	8000	16.7	53400	2720	6	-						
65.20	21	8000	18.8	53400	2650	6	-						
59.17*	24	8000	21	53400	2580	6	-						
50.86*	28	8000	24	53400	5670	6	-						
44.39	32	8000	28	53400	5560	6	-	**R**	**137**	**AD5**	**270**		
37.65	37	8000	33	53400	5400	6	-	**RF**	**137**	**AD5**	**290**	→ 220	
32.91	43	8000	37	53400	5240	6	-	**RM**	**137**	**AD5**	**405**		
27.83	50	7680	42	54100	5160	6	M2						

i	n_a [1/min]	M_{amax}	P_e [kW]	F_{Ra} [N] 1)	F_{Re} [N]	φ (/R)	⚠					m [kg]	
29.57*	47	7780	40	53900	5200	6	-	**R**	**137**	**AD6**	**270**		
24.12	58	8000	50	49400	4330	6	-	**RF**	**137**	**AD6**	**295**	→ 220	
								RM	**137**	**AD6**	**405**		
22.00*	64	8000	55	47100	11700	6	-						
19.04*	74	8000	63	43500	10700	6	-						
16.80*	83	8000	72	40600	9940	6	-						
14.51	96	8000	83	37300	8800	6	M2						
12.83	109	7390	87	37400	9850	6	M2	**R**	**137**	**AD7**	**280**		
10.79	130	7200	101	34700	8850	6	M1-6	**RF**	**137**	**AD7**	**305**	→ 220	
8.71	161	6900	120	31800	7540	6	M1-6	**RM**	**137**	**AD7**	**415**		
7.59	184	4600	91	41100	8460	8	M1-6						
6.38	219	4400	104	38900	7940	8	M1-6						
5.15	272	4100	120	36600	7410	8	M1-6						
R147 AD.. , n_e = 1400 1/min													**13000 Nm**
163.31	8.6	13000	12.3	62700	2970	5	-						
146.91	9.5	13000	13.6	62700	2920	5	-						
119.86	12	13000	16.7	62700	2780	5	-	**R**	**147**	**AD4**	**385**		
109.31	13	13000	18.3	62700	2730	5	-	**RF**	**147**	**AD4**	**395**	→ 220	
94.60*	15	13000	21	62700	2630	6	-	**RM**	**147**	**AD4**	**560**		
83.47	17	13000	24	62700	2540	6	-						
72.09	19	13000	28	62700	5670	6	-						
66.99	21	13000	30	62700	4550	6	-	**R**	**147**	**AD5**	**400**		
61.09	23	13000	33	62700	4470	6	-	**RF**	**147**	**AD5**	**410**	→ 220	
52.87	26	13000	38	62700	4310	6	-	**RM**	**147**	**AD5**	**570**		
46.65	30	13000	43	62700	4170	6	-						
40.29	35	13000	49	62700	6970	6	-	**R**	**147**	**AD6**	**410**		
								RF	**147**	**AD6**	**420**	→ 220	
								RM	**147**	**AD6**	**590**		
35.64	39	13000	56	62700	16800	6	-	**R**	**147**	**AD7**	**410**		
29.95	47	13000	66	62700	16600	6	M2	**RF**	**147**	**AD7**	**420**	→ 220	
24.19	58	11900	75	64700	16500	6	M1-6	**RM**	**147**	**AD7**	**590**		
20.44	68	11700	86	65100	23700	5	-						
18.04	78	10300	86	67300	24300	5	-						
15.64	90	13000	125	62700	22400	5	M1-6						
13.91	101	12300	133	64000	22500	5	M1-6						
11.99	117	10600	133	66900	23200	5	M1-6	**R**	**147**	**AD8**	**420**		
9.74	144	8650	134	67500	23900	6	M1-6	**RF**	**147**	**AD8**	**425**	→ 220	
8.26	169	7340	134	66900	24400	6	M1-6	**RM**	**147**	**AD8**	**590**		
7.25	193	6440	134	65300	23200	8	M1-6						
5.89	238	5230	134	64000	23900	8	M1-6						
5.00	280	4430	134	62600	24500	8	M1-6						
R167 AD.. , n_e = 1400 1/min													**18000 Nm**
229.71	6.1	18000	12.2	120000	6070	5	-						
186.93*	7.5	18000	14.9	120000	6000	5	-						
153.07	9.2	18000	18.1	120000	5880	5	-						
139.98	10	18000	19.8	120000	5840	5	-	**R**	**167**	**AD5**	**650**		
121.81*	11	18000	23	120000	5750	5	-	**RF**	**167**	**AD5**	**650**	→ 220	
107.49	13	18000	26	120000	5670	5	-	**RM**	**167**	**AD5**	**850**		
93.19	15	18000	30	120000	5560	5	-						
82.91*	17	18000	33	120000	5470	5	-						
73.70*	19	18000	37	120000	3380	6	-						
67.40	21	18000	41	120000	6690	6	-	**R**	**167**	**AD6**	**660**		
58.65	24	18000	47	120000	6530	6	-	**RF**	**167**	**AD6**	**670**	→ 220	
51.76	27	18000	53	120000	6380	6	-	**RM**	**167**	**AD6**	**870**		
44.87	31	18000	61	120000	16000	6	-	**R**	**167**	**AD7**	**660**		
39.92	35	18000	69	120000	15300	6	-	**RF**	**167**	**AD7**	**670**	→ 220	
34.41	41	18000	80	120000	14400	6	-	**RM**	**167**	**AD7**	**860**		
27.96	50	18000	99	120000	25500	6	M2,4	**R**	**167**	**AD8**	**680**		
23.71	59	18000	116	116500	25100	6	M1-6	**RF**	**167**	**AD8**	**690**	→ 220	
								RM	**167**	**AD8**	**880**		
46.00	30	7000	23	120000	4520	5	-	**R**	**167**	**AD5**	**640**		
								RF	**167**	**AD5**	**650**	→ 220	
								RM	**167**	**AD5**	**840**		
37.74	37	9000	36	120000	6270	5	-	**R**	**167**	**AD6**	**660**		
30.71	46	10000	49	120000	4550	5	-	**RF**	**167**	**AD6**	**670**	→ 220	
								RM	**167**	**AD6**	**860**		

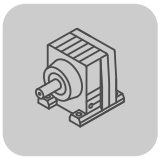

R..
R(X).. AD.. [kW]

i	n_a [1/min]	M_{amax}	P_e [kW]	F_{Ra} 1) [N]	F_{Re} [N]	φ (/R)	⚠					m [kg]	
24.57	57	14000	86	120000	23700	5	-						
21.85	64	13000	90	120000	24000	5	-						
19.03	74	16000	127	111400	22200	5	-	**R**	**167**	**AD8**	**680**		
16.98	82	15000	133	108900	22400	5	-	**RF**	**167**	**AD8**	**680**	→ 220	
14.48	97	18000	187	93800	20300	5	M1-6	**RM**	**167**	**AD8**	**880**		
11.99	117	17000	214	88700	20100	5	M1-6						
10.24	137	17000	250	82500	19400	5	M1-6						

8.4 R.. AM.. (IEC) [mm]

01 010 02 01

RX57..

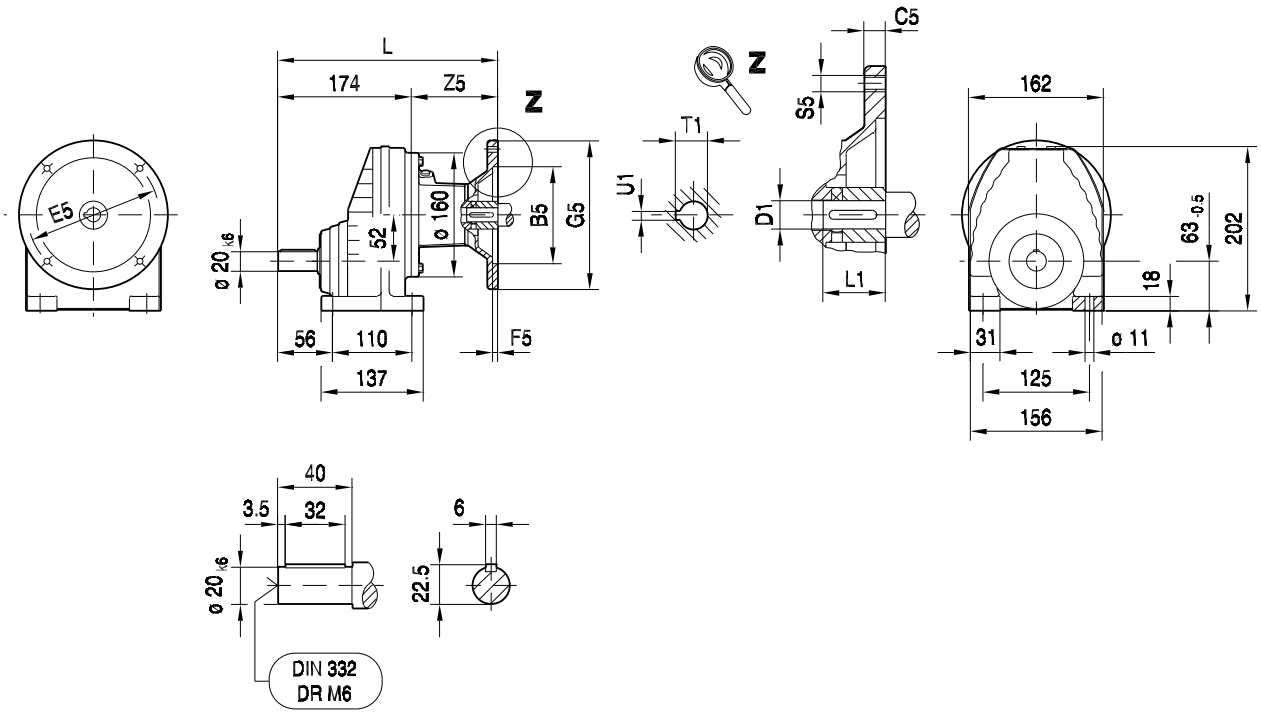

(→ 130)	B5	C5	E5	F5	G5	L	S5	Z5	D1	L1	T1	U1	
AM63	95	10	115	3.5	140	240	M8	66	11	23	12.8	4	
AM71	110	10	130	4.0	160	240	M8	66	14	30	16.3	5	
AM80	130	12	165	4.5	200	273	M10	99	19	40	21.8	6	
AM90	130	12	165	4.5	200	273	M10	99	24	50	27.3	8	
AM100	180	15	215	5.0	250	308	M12	134	28	60	31.3	8	
AM112	180	15	215	5.0	250	308	M12	134	28	60	31.3	8	
AM132S/M	230	16	265	5.0	300	365	M12	191	38	80	41.3	10	

01 011 02 01

RXF57..

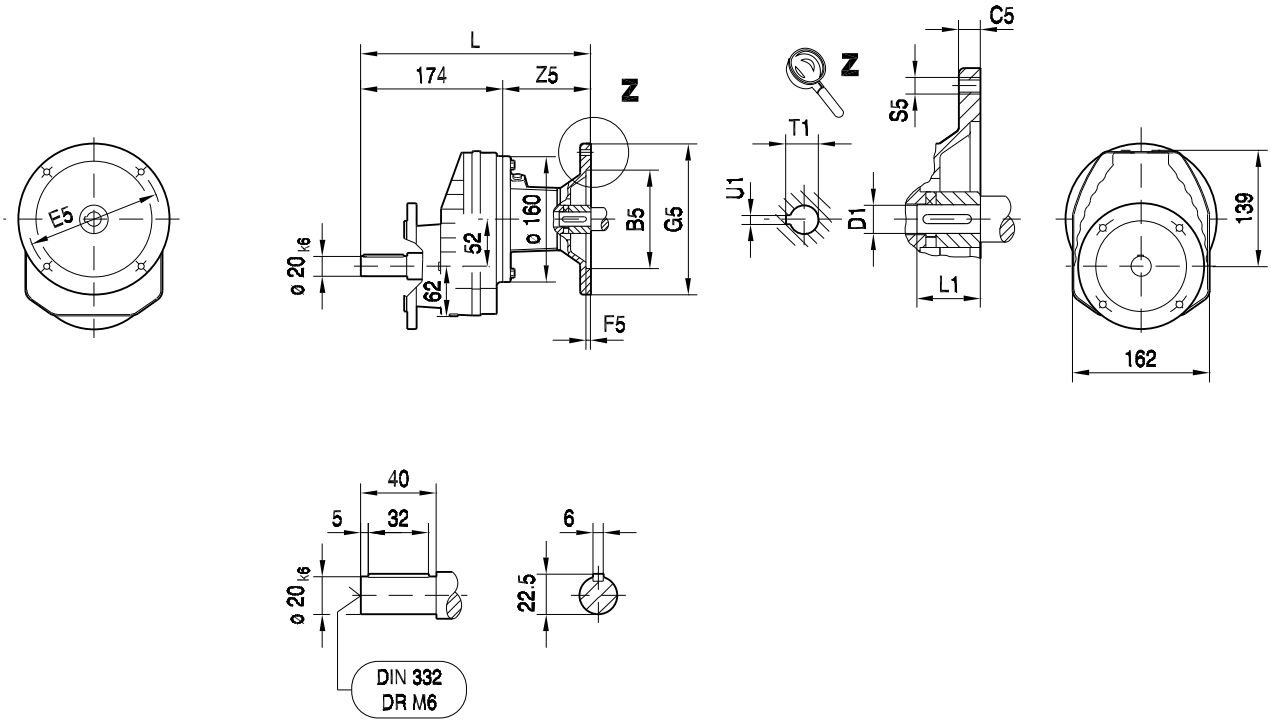

ø 140

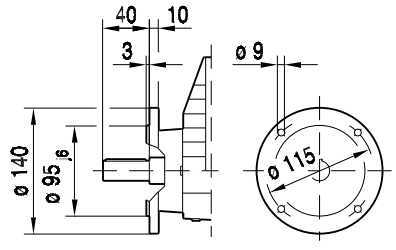

ø 160

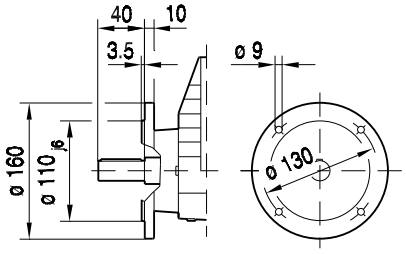

ø 200

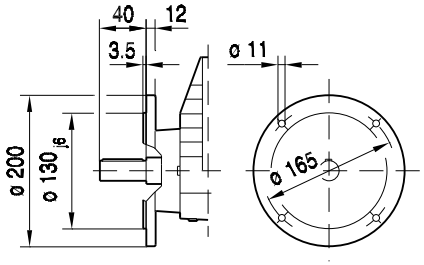

(→ 130)	B5	C5	E5	F5	G5	L	S5	Z5	D1	L1	T1	U1	
AM63	95	10	115	3.5	140	240	M8	66	11	23	12.8	4	
AM71	110	10	130	4.0	160	240	M8	66	14	30	16.3	5	
AM80	130	12	165	4.5	200	273	M10	99	19	40	21.8	6	
AM90	130	12	165	4.5	200	273	M10	99	24	50	27.3	8	
AM100	180	15	215	5.0	250	308	M12	134	28	60	31.3	8	
AM112	180	15	215	5.0	250	308	M12	134	28	60	31.3	8	
AM132S/M	230	16	265	5.0	300	365	M12	191	38	80	41.3	10	

01 012 02 01

RX67..

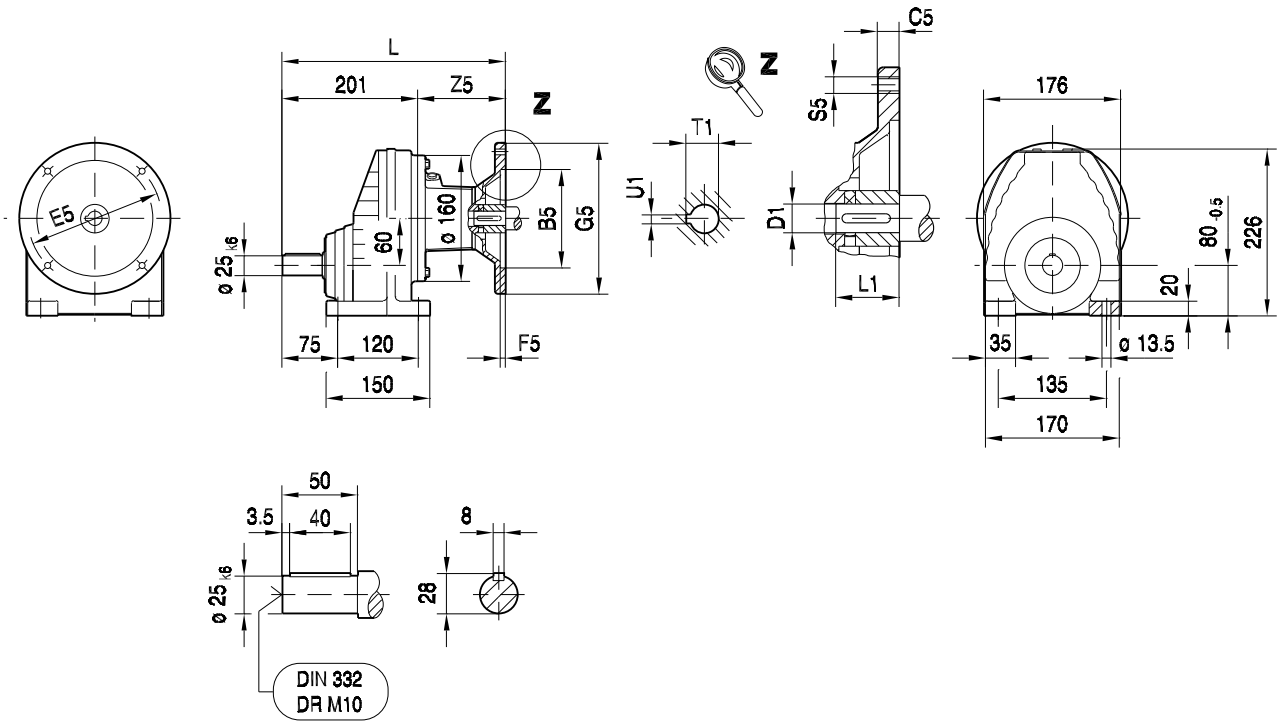

(→ 130)	B5	C5	E5	F5	G5	L	S5	Z5	D1	L1	T1	U1	
AM63	95	10	115	3.5	140	267	M8	66	11	23	12.8	4	
AM71	110	10	130	4.0	160	267	M8	66	14	30	16.3	5	
AM80	130	12	165	4.5	200	300	M10	99	19	40	21.8	6	
AM90	130	12	165	4.5	200	300	M10	99	24	50	27.3	8	
AM100	180	15	215	5.0	250	335	M12	134	28	60	31.3	8	
AM112	180	15	215	5.0	250	335	M12	134	28	60	31.3	8	
AM132S/M	230	16	265	5.0	300	392	M12	191	38	80	41.3	10	

01 013 02 01

RXF67..

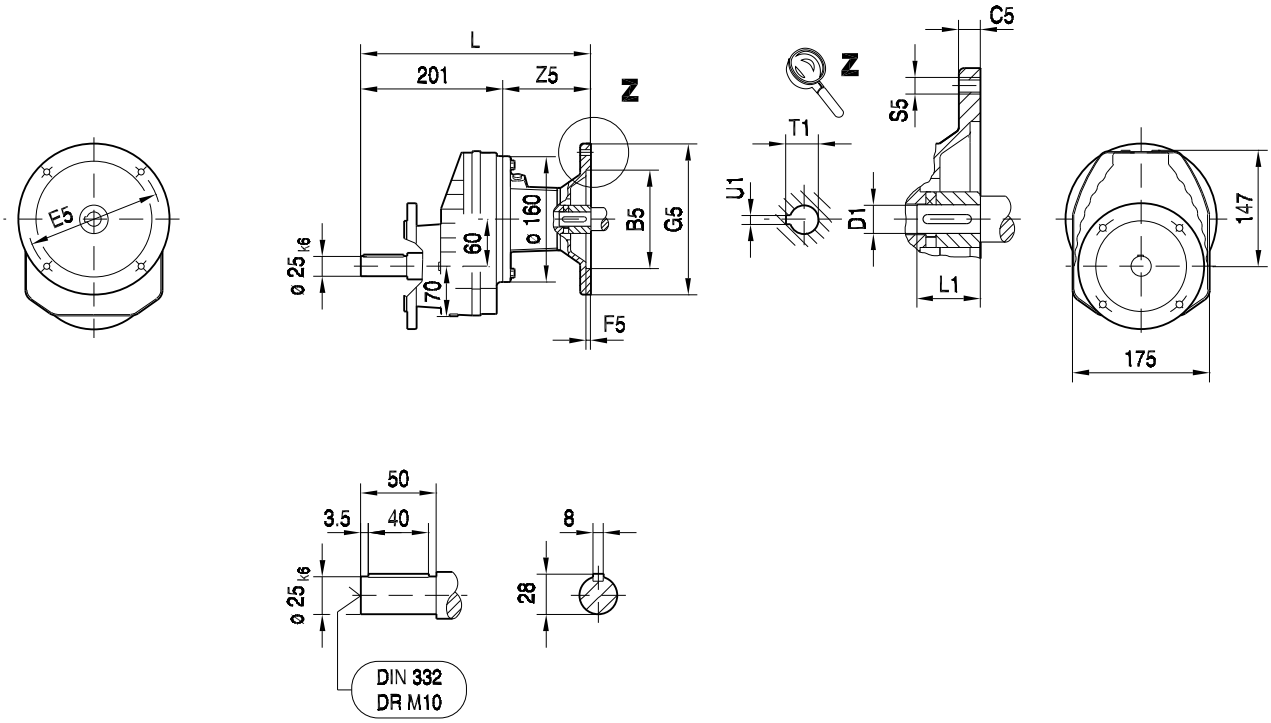

ø 160

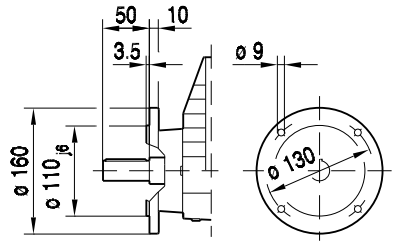

ø 200

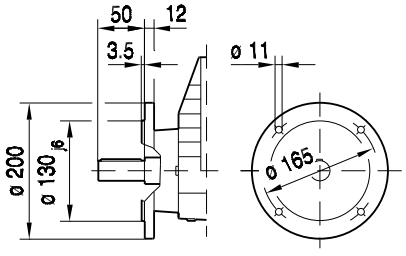

ø 250

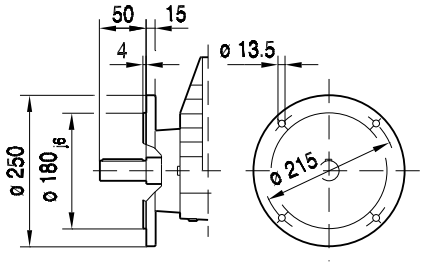

(→ 130)	B5	C5	E5	F5	G5	L	S5	Z5	D1	L1	T1	U1	
AM63	95	10	115	3.5	140	267	M8	66	11	23	12.8	4	
AM71	110	10	130	4.0	160	267	M8	66	14	30	16.3	5	
AM80	130	12	165	4.5	200	300	M10	99	19	40	21.8	6	
AM90	130	12	165	4.5	200	300	M10	99	24	50	27.3	8	
AM100	180	15	215	5.0	250	335	M12	134	28	60	31.3	8	
AM112	180	15	215	5.0	250	335	M12	134	28	60	31.3	8	
AM132S/M	230	16	265	5.0	300	392	M12	191	38	80	41.3	10	

01 014 02 01

RX77..

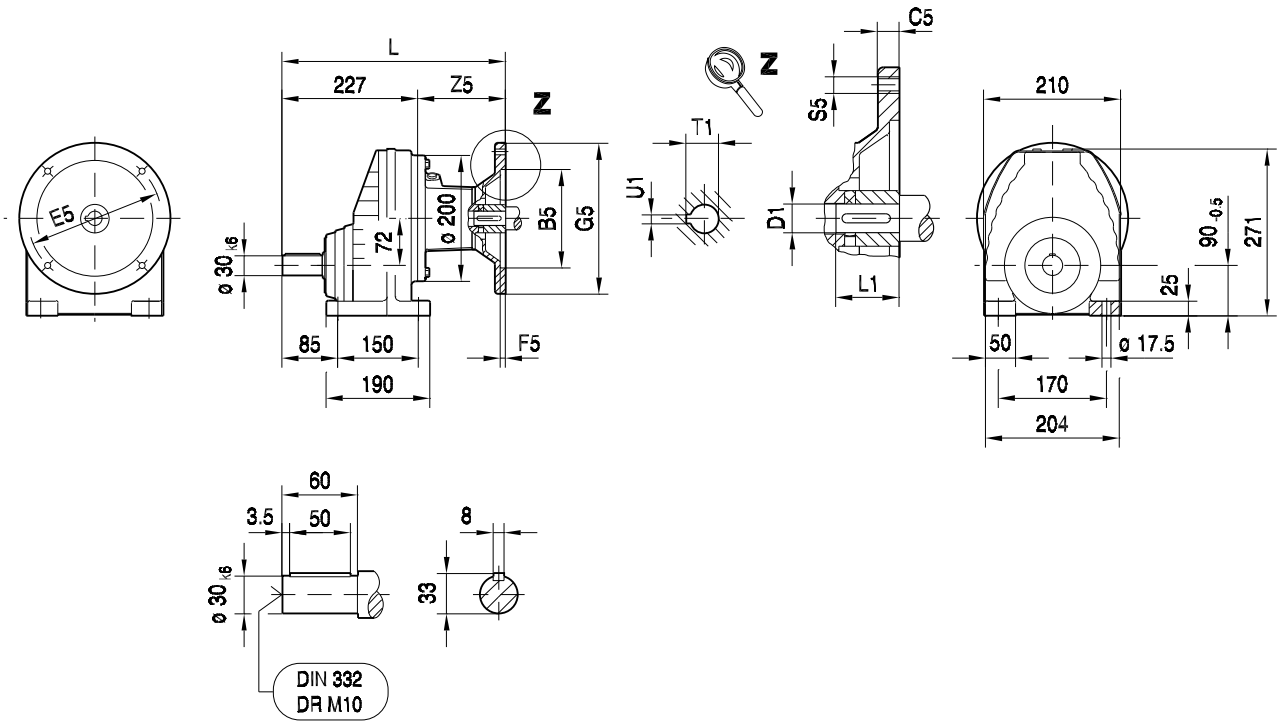

(→ 📖 130)	B5	C5	E5	F5	G5	L	S5	Z5	D1	L1	T1	U1	
AM63	95	10	115	3.5	140	287	M8	60	11	23	12.8	4	
AM71	110	10	130	4.0	160	287	M8	60	14	30	16.3	5	
AM80	130	12	165	4.5	200	319	M10	92	19	40	21.8	6	
AM90	130	12	165	4.5	200	319	M10	92	24	50	27.3	8	
AM100	180	15	215	5.0	250	353	M12	126	28	60	31.3	8	
AM112	180	15	215	5.0	250	353	M12	126	28	60	31.3	8	
AM132S/M	230	16	265	5.0	300	406	M12	179	38	80	41.3	10	
AM132ML	230	16	265	5.0	300	406	M12	179	38	80	41.3	10	

01 015 02 01

RXF77..

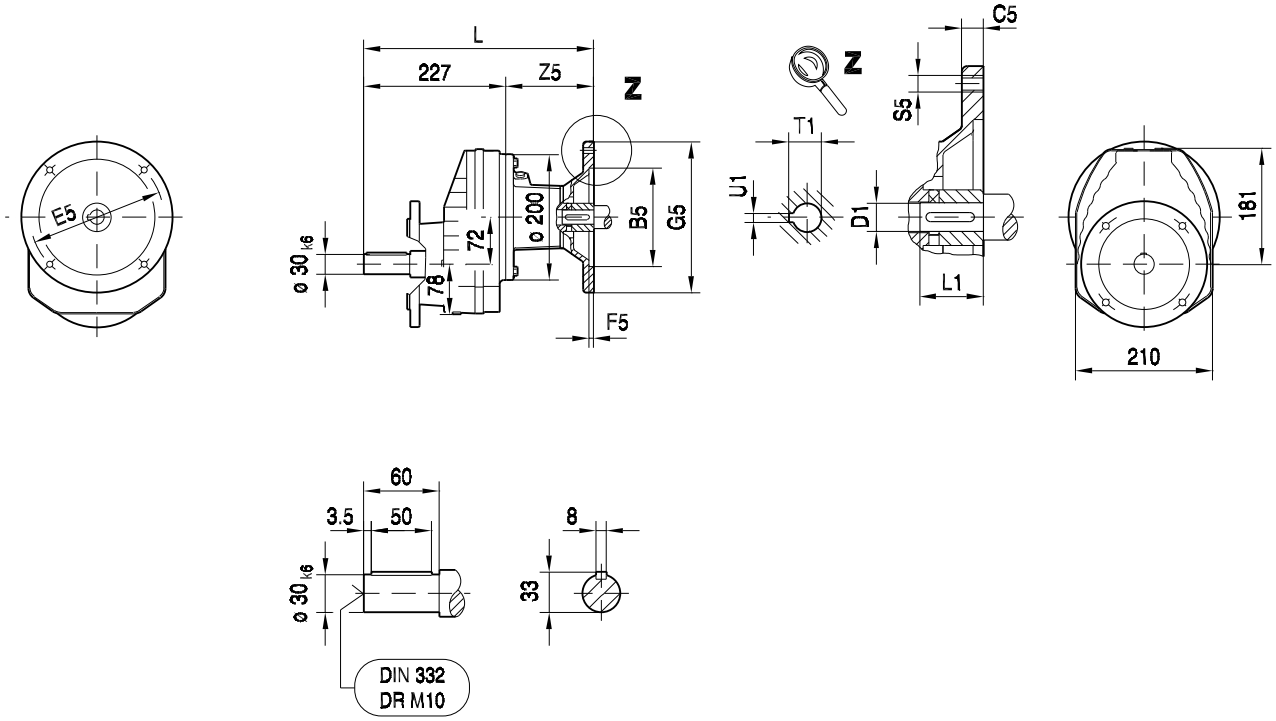

ø 200

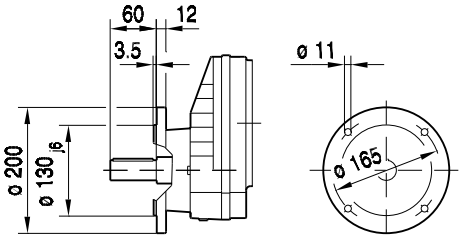

ø 250

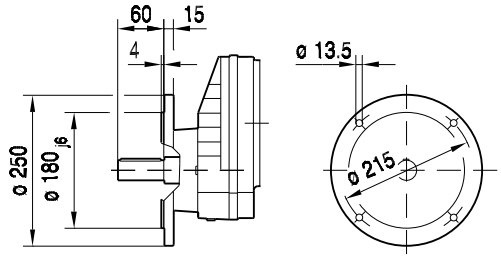

(→ 📖 130)	B5	C5	E5	F5	G5	L	S5	Z5	D1	L1	T1	U1	
AM63	95	10	115	3.5	140	287	M8	60	11	23	12.8	4	
AM71	110	10	130	4.0	160	287	M8	60	14	30	16.3	5	
AM80	130	12	165	4.5	200	319	M10	92	19	40	21.8	6	
AM90	130	12	165	4.5	200	319	M10	92	24	50	27.3	8	
AM100	180	15	215	5.0	250	353	M12	126	28	60	31.3	8	
AM112	180	15	215	5.0	250	353	M12	126	28	60	31.3	8	
AM132S/M	230	16	265	5.0	300	406	M12	179	38	80	41.3	10	
AM132ML	230	16	265	5.0	300	406	M12	179	38	80	41.3	10	

01 016 01 01

RX87..

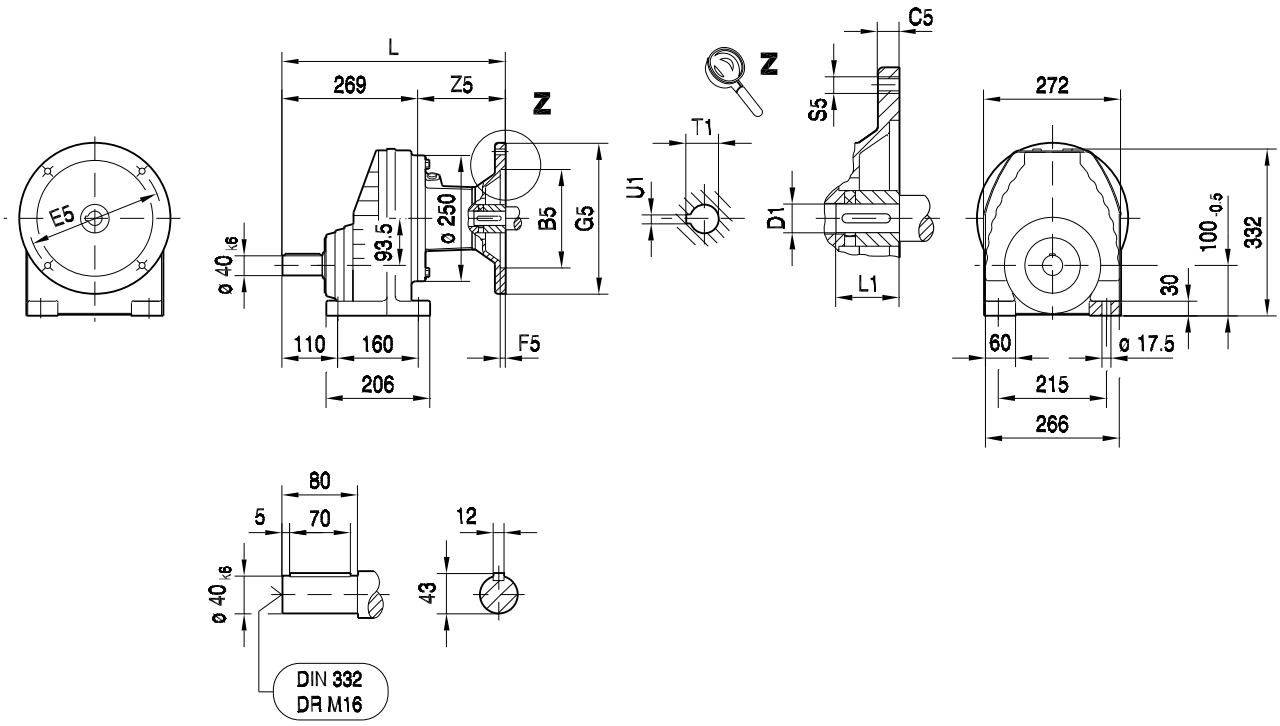

(→ 130)	B5	C5	E5	F5	G5	L	S5	Z5	D1	L1	T1	U1	
AM80	130	12	165	4.5	200	356	M10	87	19	40	21.8	6	
AM90	130	12	165	4.5	200	356	M10	87	24	50	27.3	8	
AM100	180	15	215	5.0	250	390	M12	121	28	60	31.3	8	
AM112	180	15	215	5.0	250	390	M12	121	28	60	31.3	8	
AM132S/M	230	16	265	5.0	300	443	M12	174	38	80	41.3	10	
AM132ML	230	16	265	5.0	300	443	M12	174	38	80	41.3	10	
AM160	250	18	300	6.0	350	501	M16	232	42	110	45.3	12	
AM180	250	18	300	6.0	350	501	M16	232	48	110	51.8	14	

01 017 01 01

RXF87..

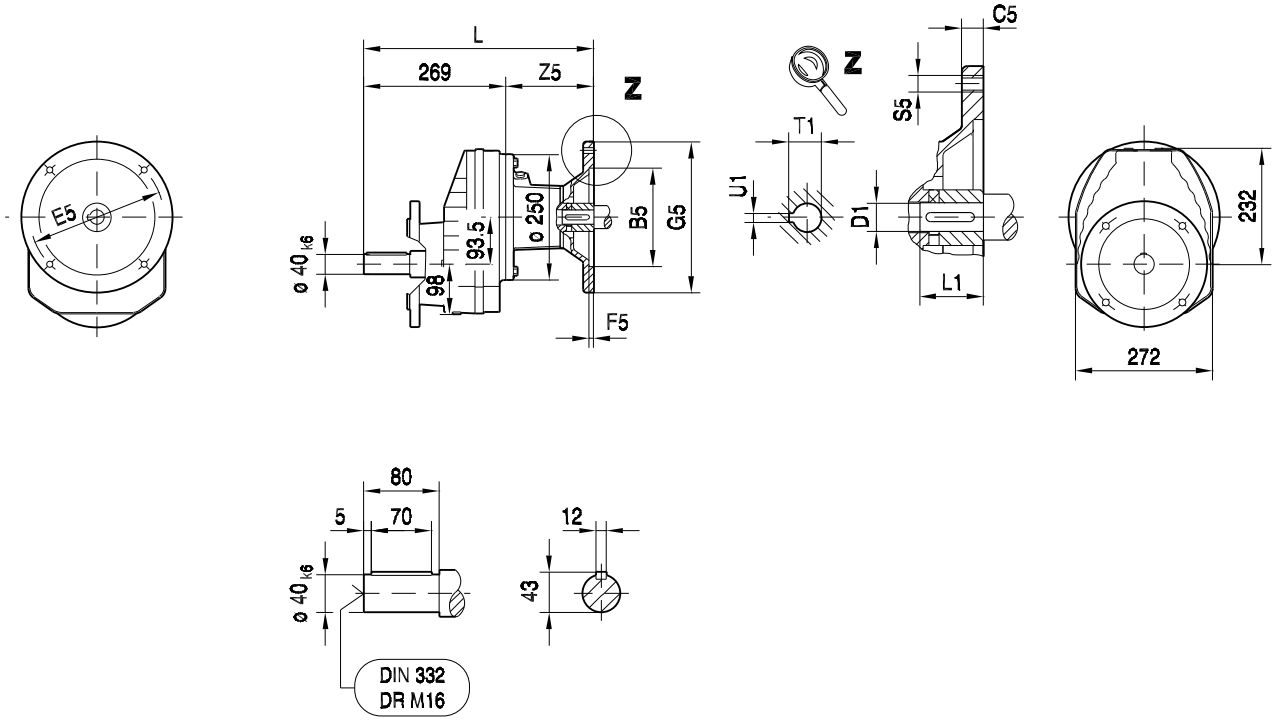

ø 250

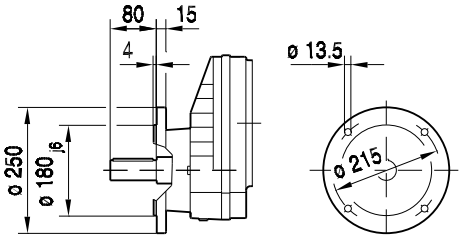

ø 300

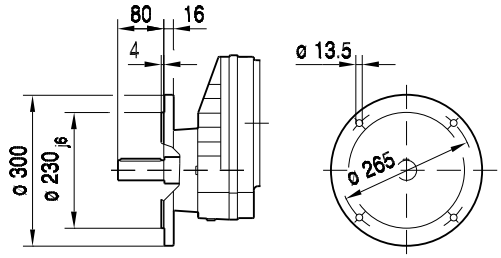

(→ 130)	B5	C5	E5	F5	G5	L	S5	Z5	D1	L1	T1	U1	
AM80	130	12	165	4.5	200	356	M10	87	19	40	21.8	6	
AM90	130	12	165	4.5	200	356	M10	87	24	50	27.3	8	
AM100	180	15	215	5.0	250	390	M12	121	28	60	31.3	8	
AM112	180	15	215	5.0	250	390	M12	121	28	60	31.3	8	
AM132S/M	230	16	265	5.0	300	443	M12	174	38	80	41.3	10	
AM132ML	230	16	265	5.0	300	443	M12	174	38	80	41.3	10	
AM160	250	18	300	6.0	350	501	M16	232	42	110	45.3	12	
AM180	250	18	300	6.0	350	501	M16	232	48	110	51.8	14	

01 018 01 01

RX97..

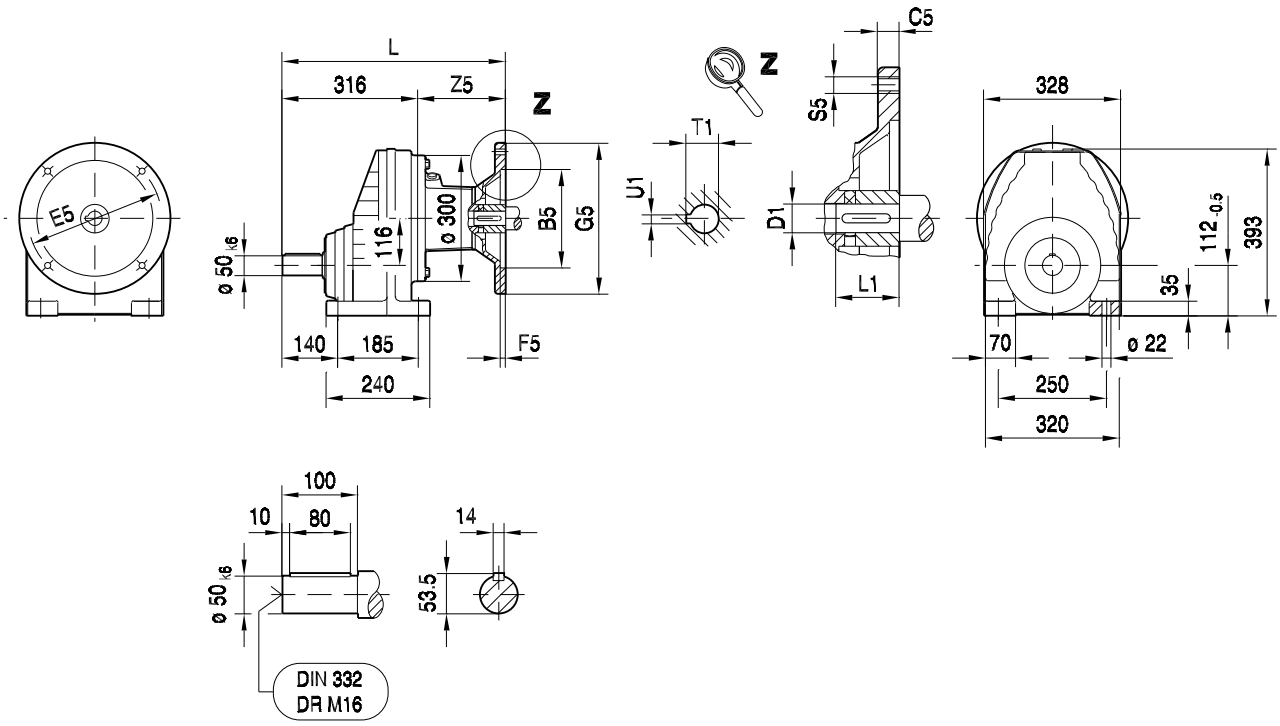

(→ 130)	B5	C5	E5	F5	G5	L	S5	Z5	D1	L1	T1	U1	
AM100	180	15	215	5.0	250	432	M12	116	28	60	31.3	8	
AM112	180	15	215	5.0	250	432	M12	116	28	60	31.3	8	
AM132S/M	230	16	265	5.0	300	485	M12	169	38	80	41.3	10	
AM132ML	230	16	265	5.0	300	485	M12	169	38	80	41.3	10	
AM160	250	18	300	6.0	350	543	M16	227	42	110	45.3	12	
AM180	250	18	300	6.0	350	543	M16	227	48	110	51.8	14	
AM200	300	20	350	7.0	400	584	M16	268	55	110	59.3	16	

01 019 01 01

RXF97..

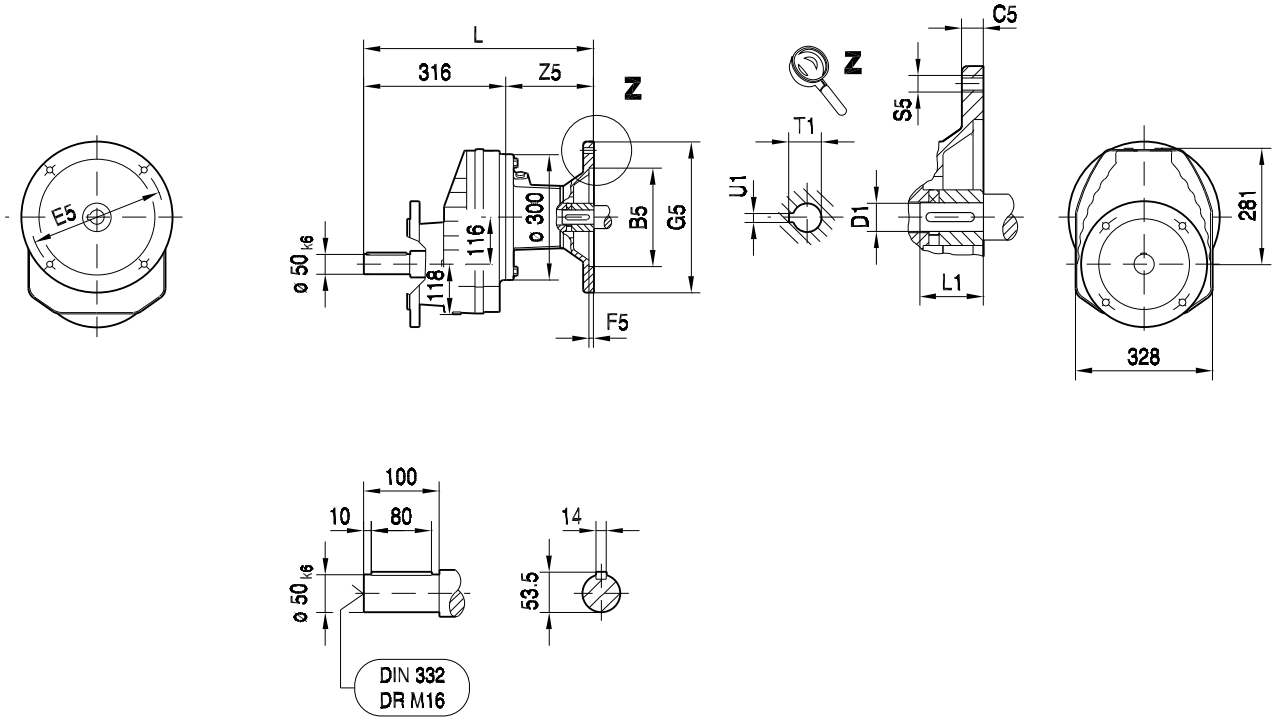

ø 300

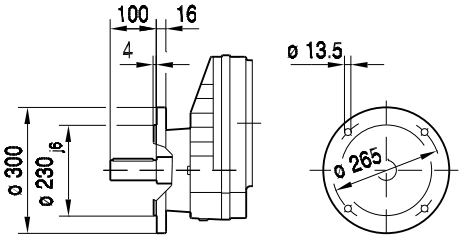

ø 350

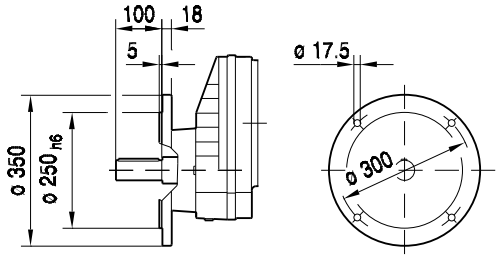

(→ 📖 130)	B5	C5	E5	F5	G5	L	S5	Z5	D1	L1	T1	U1	
AM100	180	15	215	5.0	250	432	M12	116	28	60	31.3	8	
AM112	180	15	215	5.0	250	432	M12	116	28	60	31.3	8	
AM132S/M	230	16	265	5.0	300	485	M12	169	38	80	41.3	10	
AM132ML	230	16	265	5.0	300	485	M12	169	38	80	41.3	10	
AM160	250	18	300	6.0	350	543	M16	227	42	110	45.3	12	
AM180	250	18	300	6.0	350	543	M16	227	48	110	51.8	14	
AM200	300	20	350	7.0	400	584	M16	268	55	110	59.3	16	

01 020 01 01

RX107..

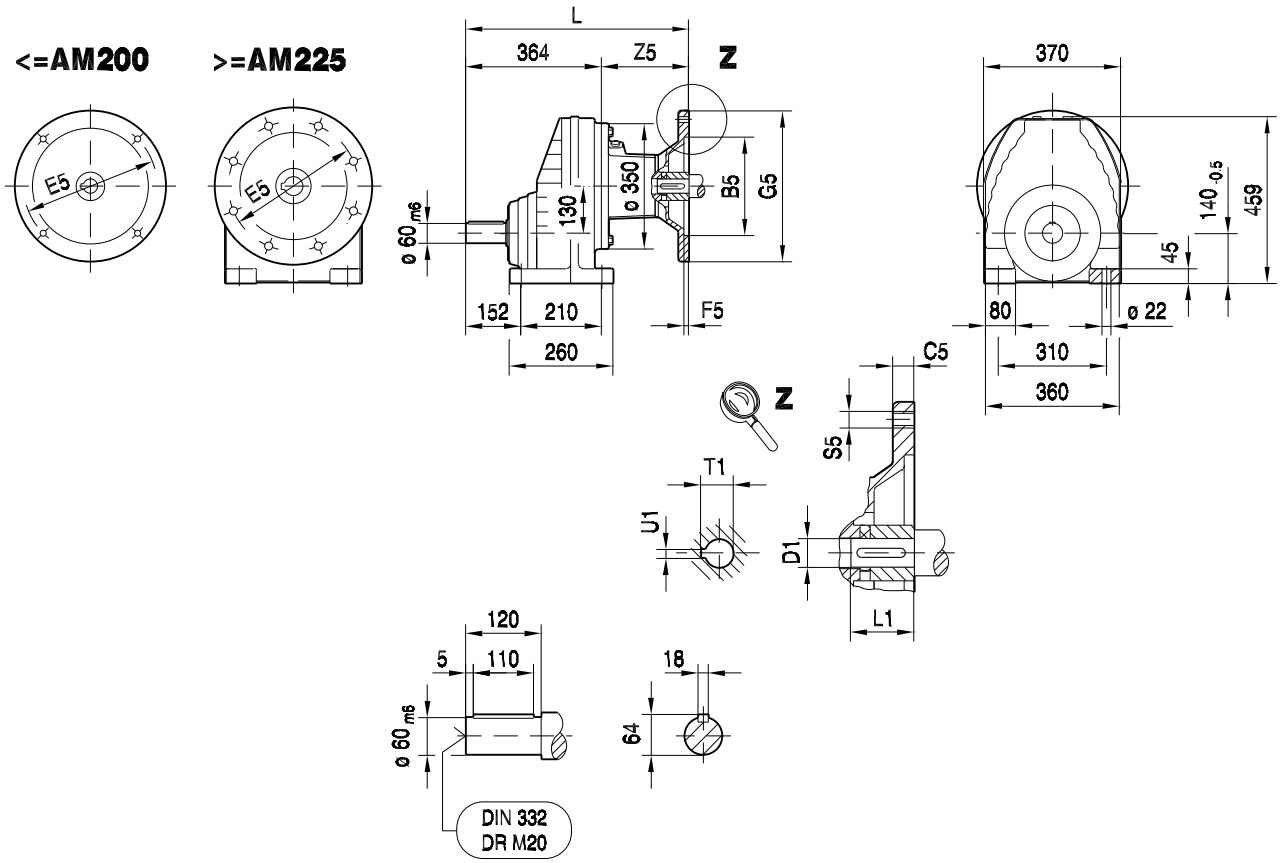

(→ 130)	B5	C5	E5	F5	G5	L	S5	Z5	D1	L1	T1	U1	
AM100	180	15	215	5.0	250	474	M12	110	28	60	31.3	8	
AM112	180	15	215	5.0	250	474	M12	110	28	60	31.3	8	
AM132S/M	230	16	265	5.0	300	527	M12	163	38	80	41.3	10	
AM132ML	230	16	265	5.0	300	527	M12	163	38	80	41.3	10	
AM160	250	18	300	6.0	350	585	M16	221	42	110	45.3	12	
AM180	250	18	300	6.0	350	585	M16	221	48	110	51.8	14	
AM200	300	20	350	7.0	400	626	M16	262	55	110	59.3	16	
AM225	350	22	400	7.0	450	641	M16	277	60	140	64.4	18	

01 021 01 01

RXF107..

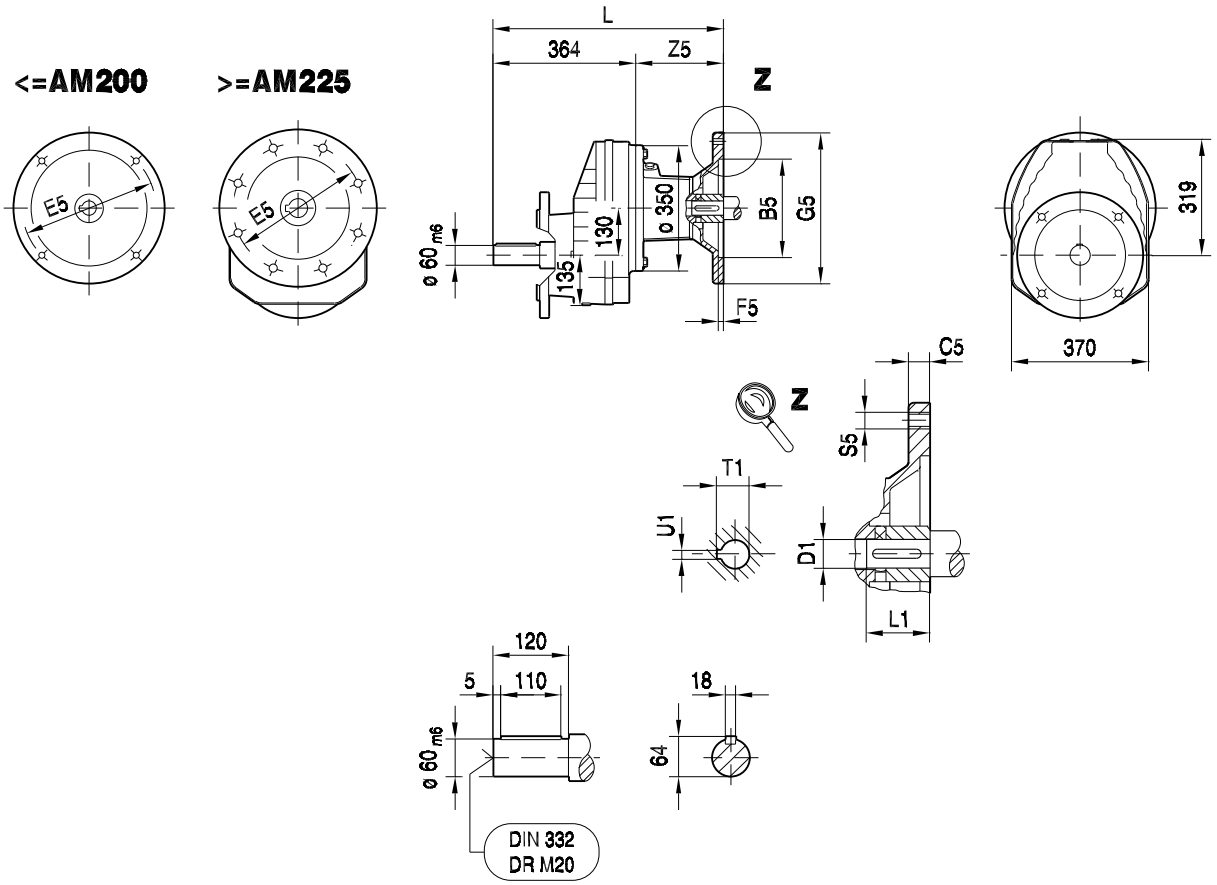

ø 350

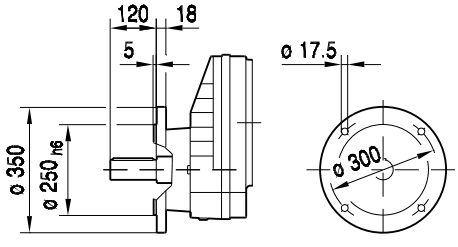

ø 450

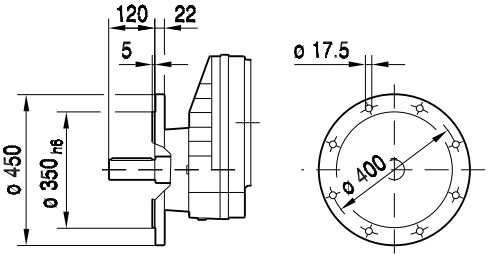

(→ 130)	B5	C5	E5	F5	G5	L	S5	Z5	D1	L1	T1	U1	
AM100	180	15	215	5.0	250	474	M12	110	28	60	31.3	8	
AM112	180	15	215	5.0	250	474	M12	110	28	60	31.3	8	
AM132S/M	230	16	265	5.0	300	527	M12	163	38	80	41.3	10	
AM132ML	230	16	265	5.0	300	527	M12	163	38	80	41.3	10	
AM160	250	18	300	6.0	350	585	M16	221	42	110	45.3	12	
AM180	250	18	300	6.0	350	585	M16	221	48	110	51.8	14	
AM200	300	20	350	7.0	400	626	M16	262	55	110	59.3	16	
AM225	350	22	400	7.0	450	641	M16	277	60	140	64.4	18	

01 022 02 01

R27..

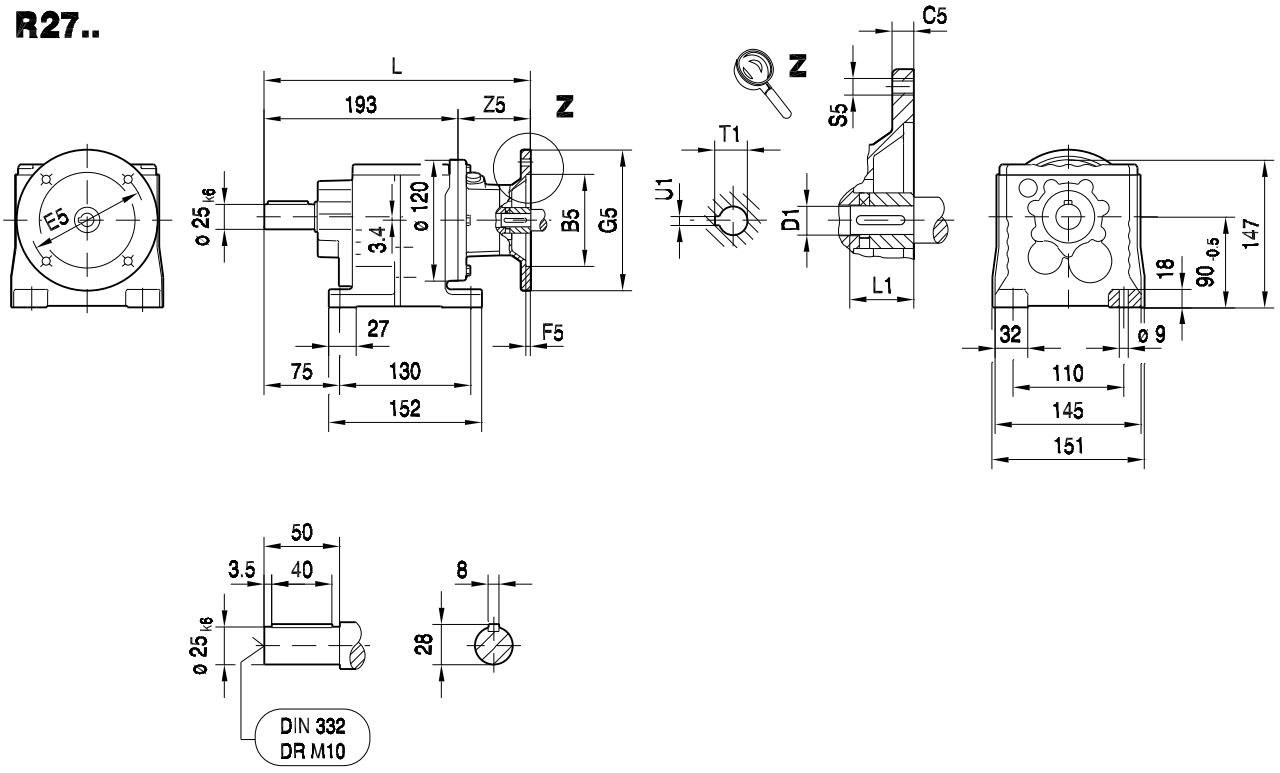

R27F..

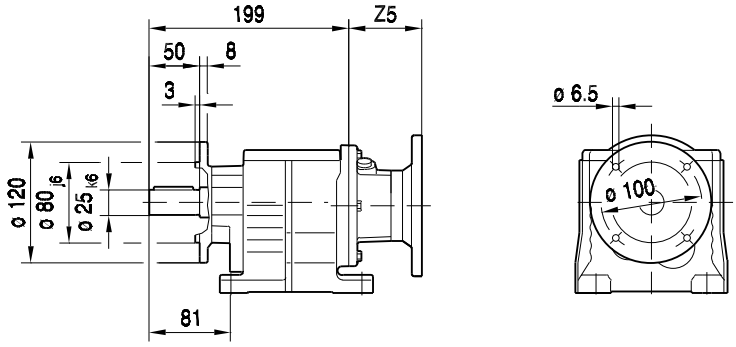

(→ 130)	B5	C5	E5	F5	G5	L	S5	Z5	D1	L1	T1	U1	
AM63	95	10	115	3.5	140	265	M8	72	11	23	12.8	4	
AM71	110	10	130	4.0	160	265	M8	72	14	30	16.3	5	
AM80	130	12	165	4.5	200	299	M10	106	19	40	21.8	6	
AM90	130	12	165	4.5	200	299	M10	106	24	50	27.3	8	

01 023 02 01

RF27..

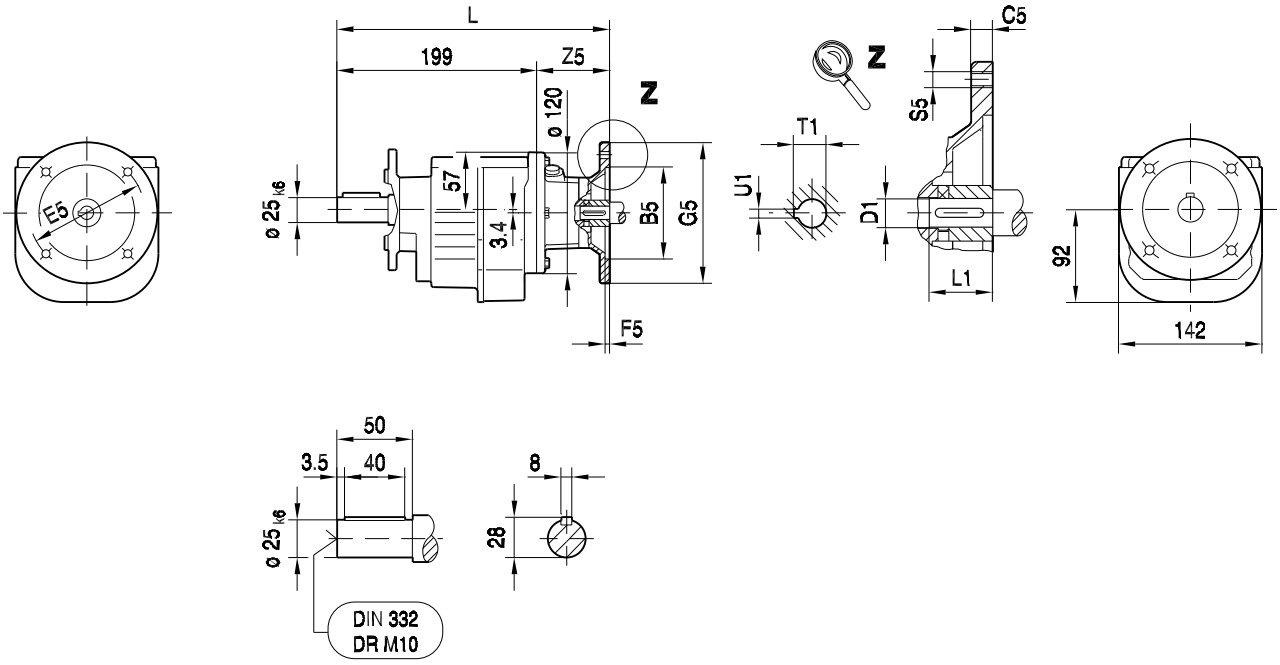

ø 120

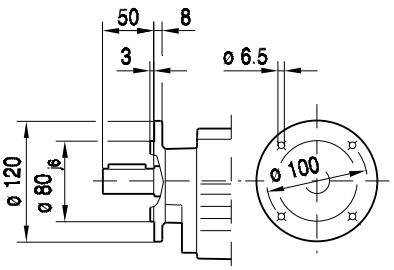

ø 140

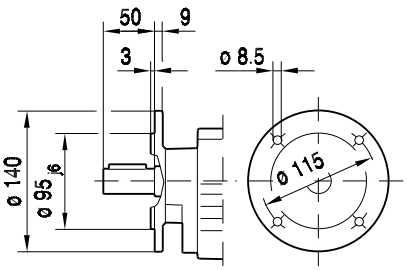

ø 160

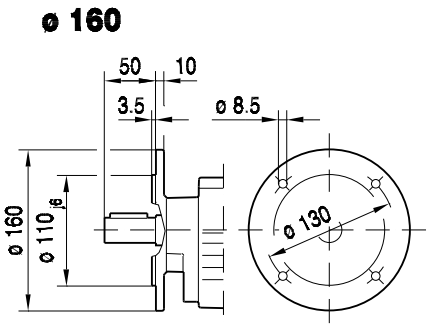

(→ 130)	B5	C5	E5	F5	G5	L	S5	Z5	D1	L1	T1	U1	
AM63	95	10	115	3.5	140	271	M8	72	11	23	12.8	4	
AM71	110	10	130	4.0	160	271	M8	72	14	30	16.3	5	
AM80	130	12	165	4.5	200	305	M10	106	19	40	21.8	6	
AM90	130	12	165	4.5	200	305	M10	106	24	50	27.3	8	

01 004 00 07

RZ27..

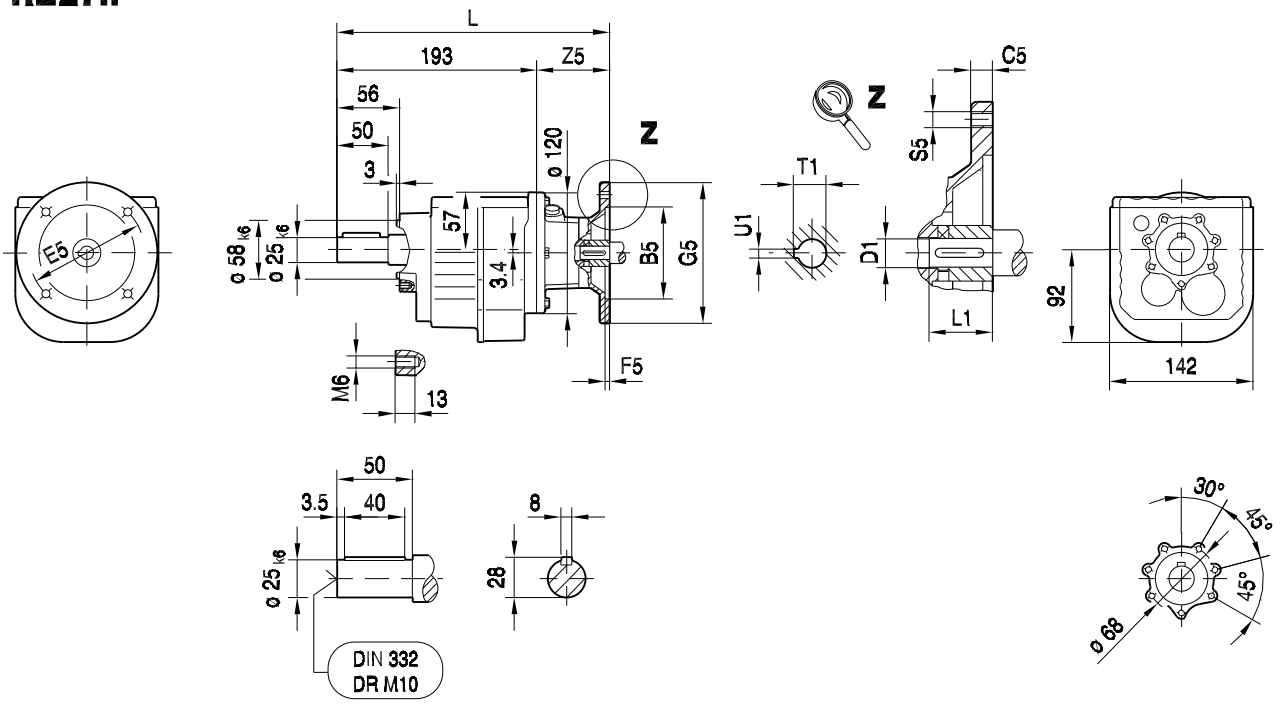

(→ 130)	B5	C5	E5	F5	G5	L	S5	Z5	D1	L1	T1	U1	
AM63	95	10	115	3.5	140	265	M8	72	11	23	12.8	4	
AM71	110	10	130	4.0	160	265	M8	72	14	30	16.3	5	
AM80	130	12	165	4.5	200	299	M10	106	19	40	21.8	6	
AM90	130	12	165	4.5	200	299	M10	106	24	50	27.3	8	

R37..

01 024 02 01

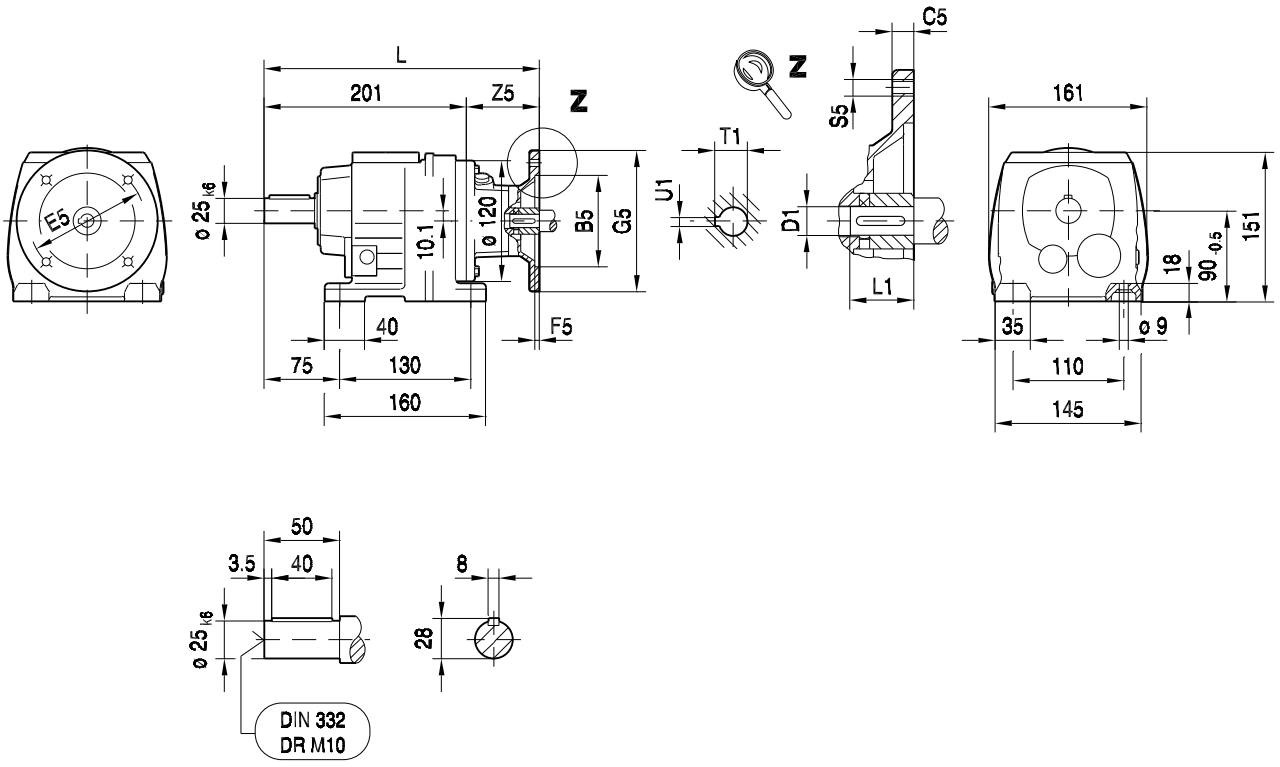

R37F..

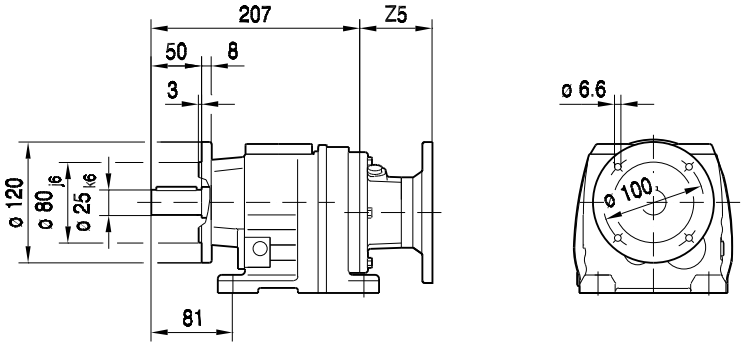

(→ 130)	B5	C5	E5	F5	G5	L	S5	Z5	D1	L1	T1	U1	
AM63	95	10	115	3.5	140	273	M8	72	11	23	12.8	4	
AM71	110	10	130	4.0	160	273	M8	72	14	30	16.3	5	
AM80	130	12	165	4.5	200	307	M10	106	19	40	21.8	6	
AM90	130	12	165	4.5	200	307	M10	106	24	50	27.3	8	

01 025 02 01

RF37..

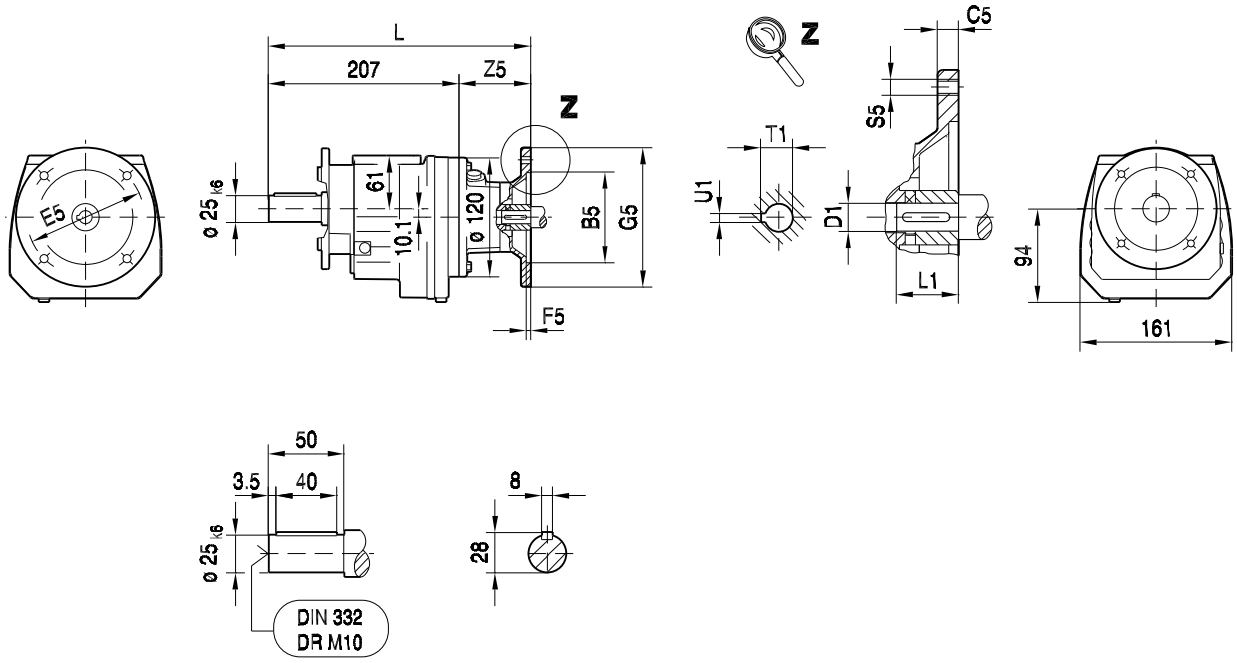

ø 120

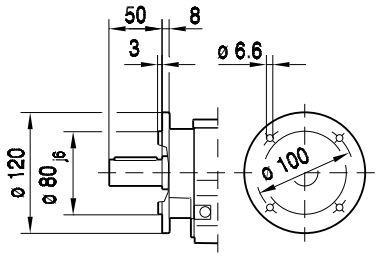

ø 160

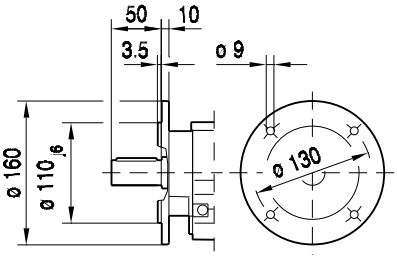

ø 200

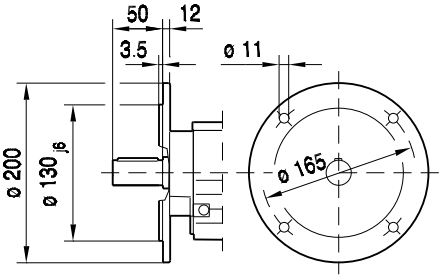

(→ 130)	B5	C5	E5	F5	G5	L	S5	Z5	D1	L1	T1	U1	
AM63	95	10	115	3.5	140	279	M8	72	11	23	12.8	4	
AM71	110	10	130	4.0	160	279	M8	72	14	30	16.3	5	
AM80	130	12	165	4.5	200	313	M10	106	19	40	21.8	6	
AM90	130	12	165	4.5	200	313	M10	106	24	50	27.3	8	

01 005 00 07

RZ37..

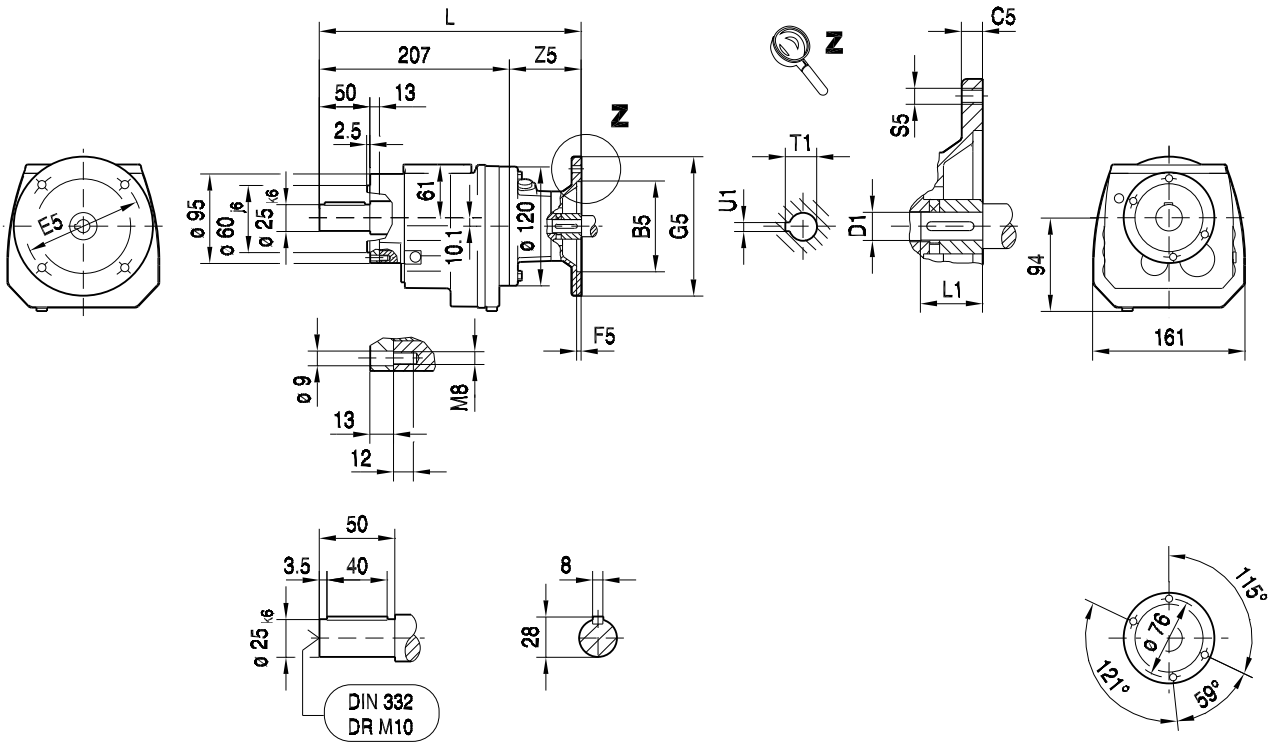

(→ 📖 130)	B5	C5	E5	F5	G5	L	S5	Z5	D1	L1	T1	U1	
AM63	95	10	115	3.5	140	279	M8	72	11	23	12.8	4	
AM71	110	10	130	4.0	160	279	M8	72	14	30	16.3	5	
AM80	130	12	165	4.5	200	313	M10	106	19	40	21.8	6	
AM90	130	12	165	4.5	200	313	M10	106	24	50	27.3	8	

01 026 01 01

R47..

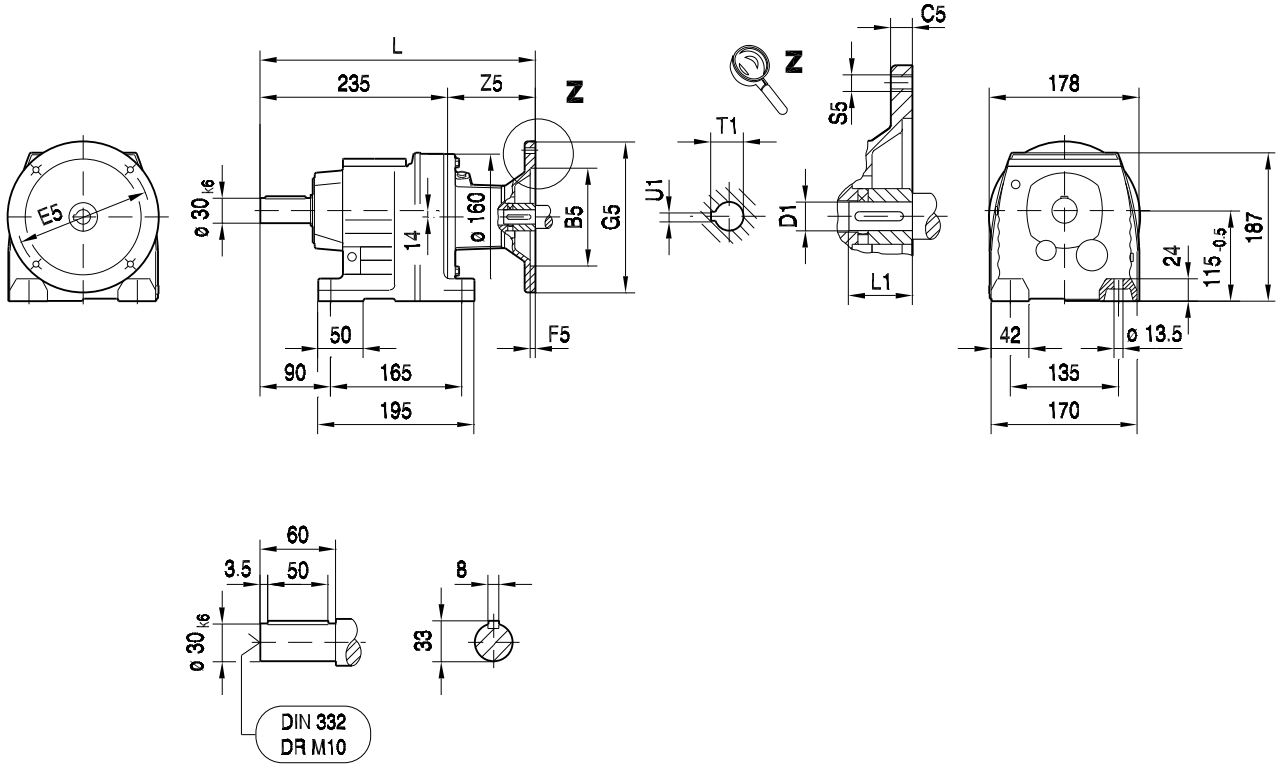

R47F..

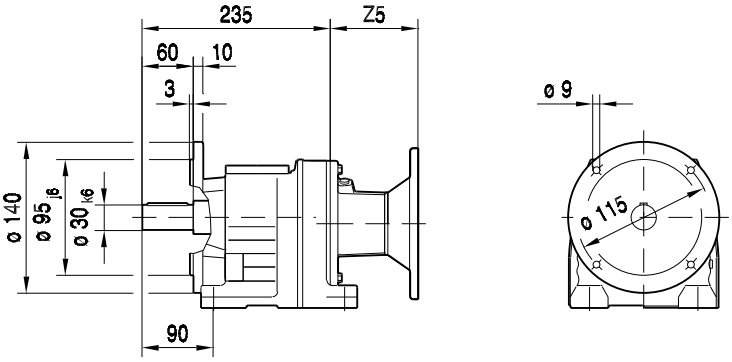

(→ 130)	B5	C5	E5	F5	G5	L	S5	Z5	D1	L1	T1	U1	
AM63	95	10	115	3.5	140	301	M8	66	11	23	12.8	4	
AM71	110	10	130	4.0	160	301	M8	66	14	30	16.3	5	
AM80	130	12	165	4.5	200	334	M10	99	19	40	21.8	6	
AM90	130	12	165	4.5	200	334	M10	99	24	50	27.3	8	
AM100	180	15	215	5.0	250	369	M12	134	28	60	31.3	8	
AM112	180	15	215	5.0	250	369	M12	134	28	60	31.3	8	
AM132S/M	230	16	265	5.0	300	426	M12	191	38	80	41.3	10	

01 027 02 01

RF47..

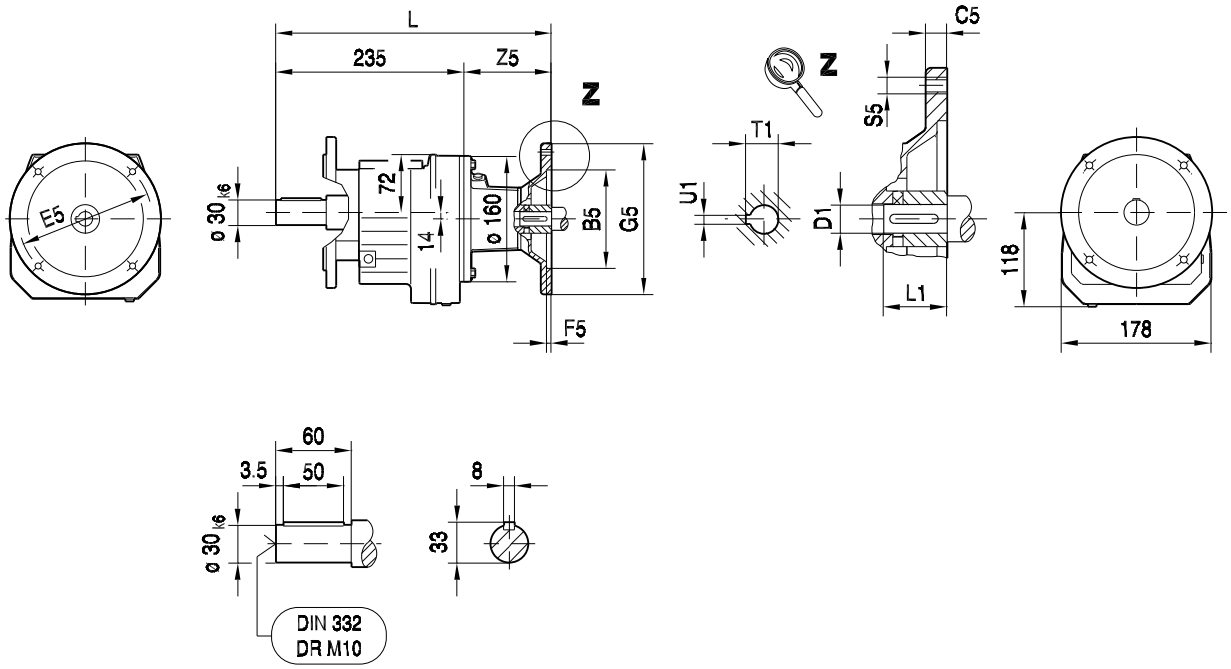

ø 140

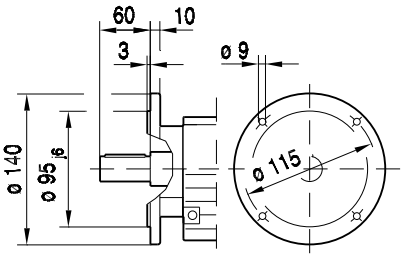

ø 160

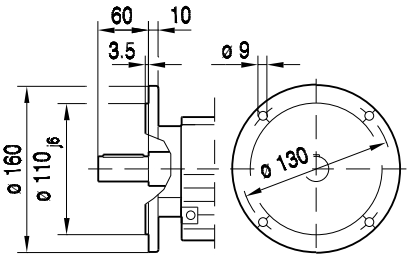

ø 200

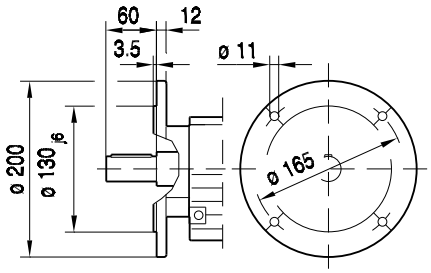

(→ 130)	B5	C5	E5	F5	G5	L	S5	Z5	D1	L1	T1	U1	
AM63	95	10	115	3.5	140	301	M8	66	11	23	12.8	4	
AM71	110	10	130	4.0	160	301	M8	66	14	30	16.3	5	
AM80	130	12	165	4.5	200	334	M10	99	19	40	21.8	6	
AM90	130	12	165	4.5	200	334	M10	99	24	50	27.3	8	
AM100	180	15	215	5.0	250	369	M12	134	28	60	31.3	8	
AM112	180	15	215	5.0	250	369	M12	134	28	60	31.3	8	
AM132S/M	230	16	265	5.0	300	426	M12	191	38	80	41.3	10	

01 006 00 07

RZ47..

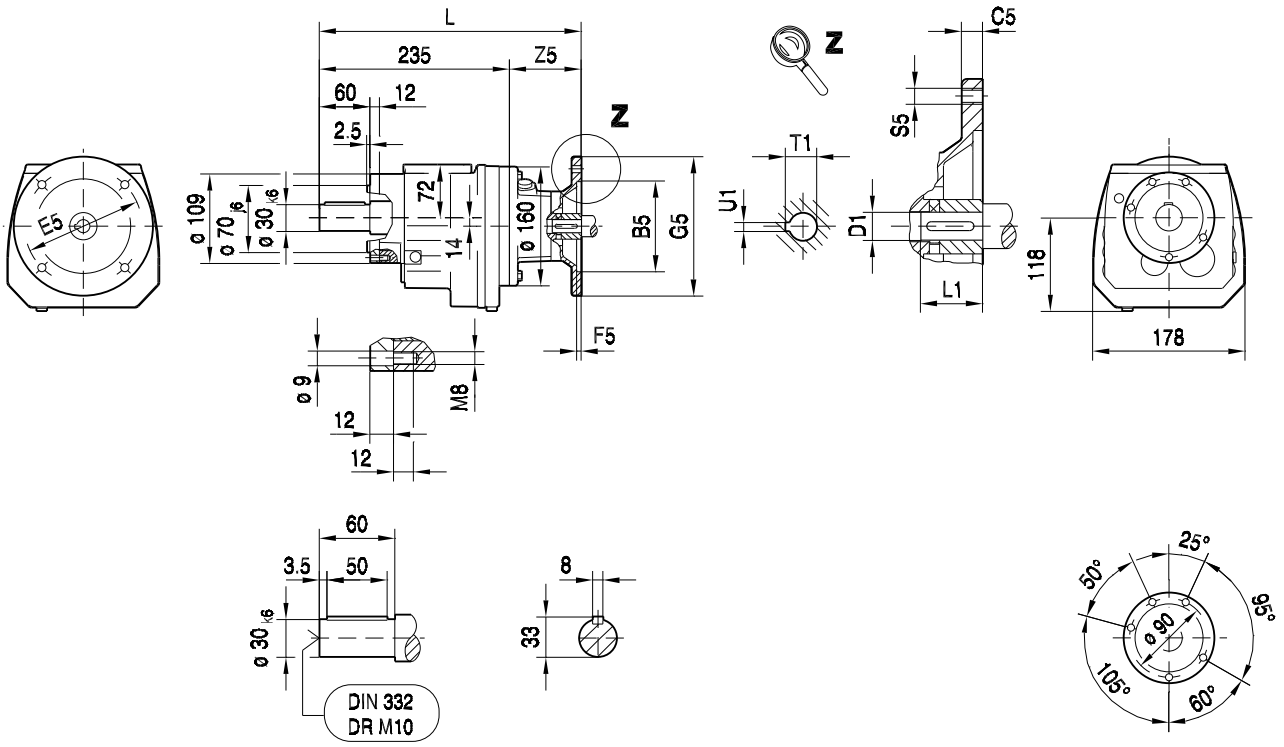

(→ 130)	B5	C5	E5	F5	G5	L	S5	Z5	D1	L1	T1	U1	
AM63	95	10	115	3.5	140	301	M8	66	11	23	12.8	4	
AM71	110	10	130	4.0	160	301	M8	66	14	30	16.3	5	
AM80	130	12	165	4.5	200	334	M10	99	19	40	21.8	6	
AM90	130	12	165	4.5	200	334	M10	99	24	50	27.3	8	
AM100	180	15	215	5.0	250	369	M12	134	28	60	31.3	8	
AM112	180	15	215	5.0	250	369	M12	134	28	60	31.3	8	
AM132S/M	230	16	265	5.0	300	426	M12	191	38	80	41.3	10	

01 028 02 01

R57..

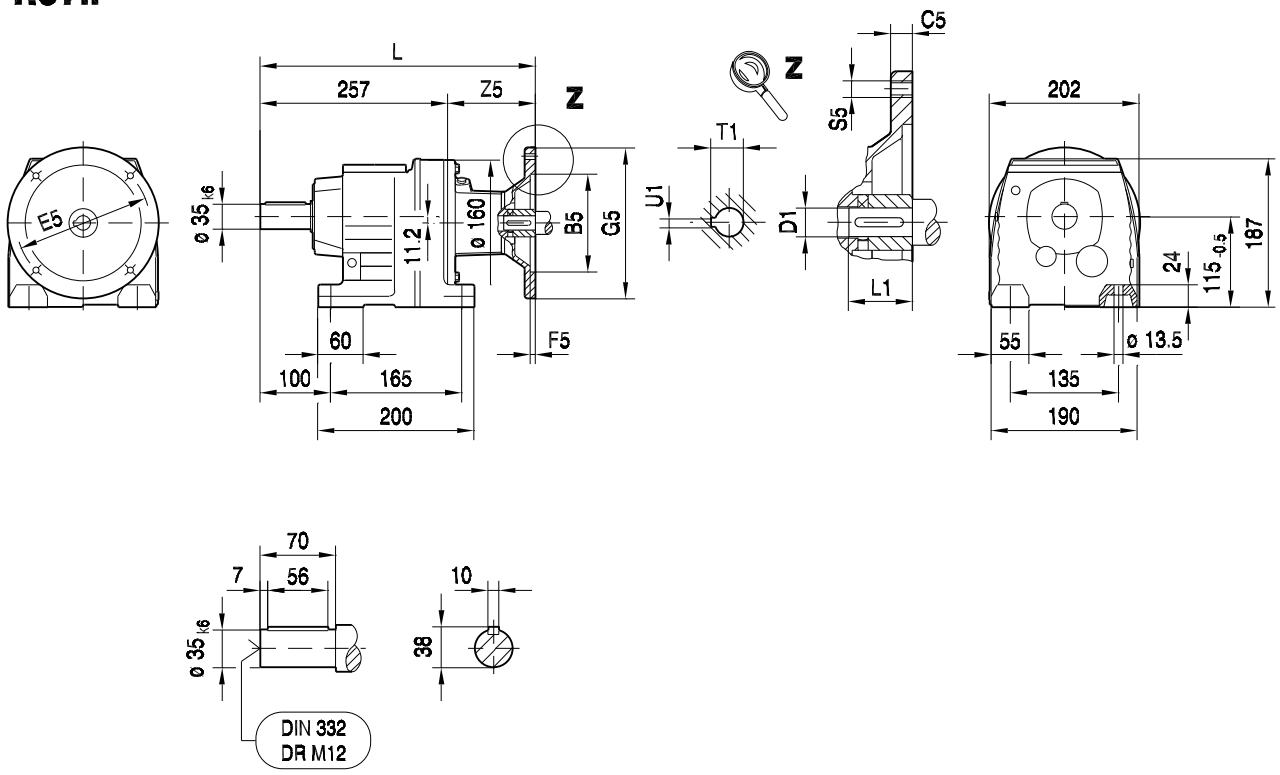

R57F..

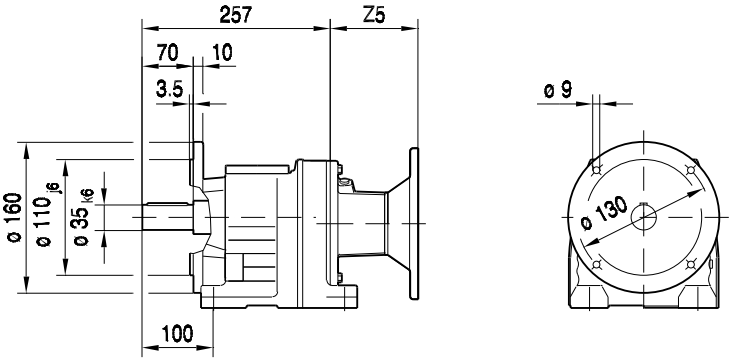

(→ 130)	B5	C5	E5	F5	G5	L	S5	Z5	D1	L1	T1	U1	
AM63	95	10	115	3.5	140	323	M8	66	11	23	12.8	4	
AM71	110	10	130	4.0	160	323	M8	66	14	30	16.3	5	
AM80	130	12	165	4.5	200	356	M10	99	19	40	21.8	6	
AM90	130	12	165	4.5	200	356	M10	99	24	50	27.3	8	
AM100	180	15	215	5.0	250	391	M12	134	28	60	31.3	8	
AM112	180	15	215	5.0	250	391	M12	134	28	60	31.3	8	
AM132S/M	230	16	265	5.0	300	448	M12	191	38	80	41.3	10	

01 029 02 01

RF57..

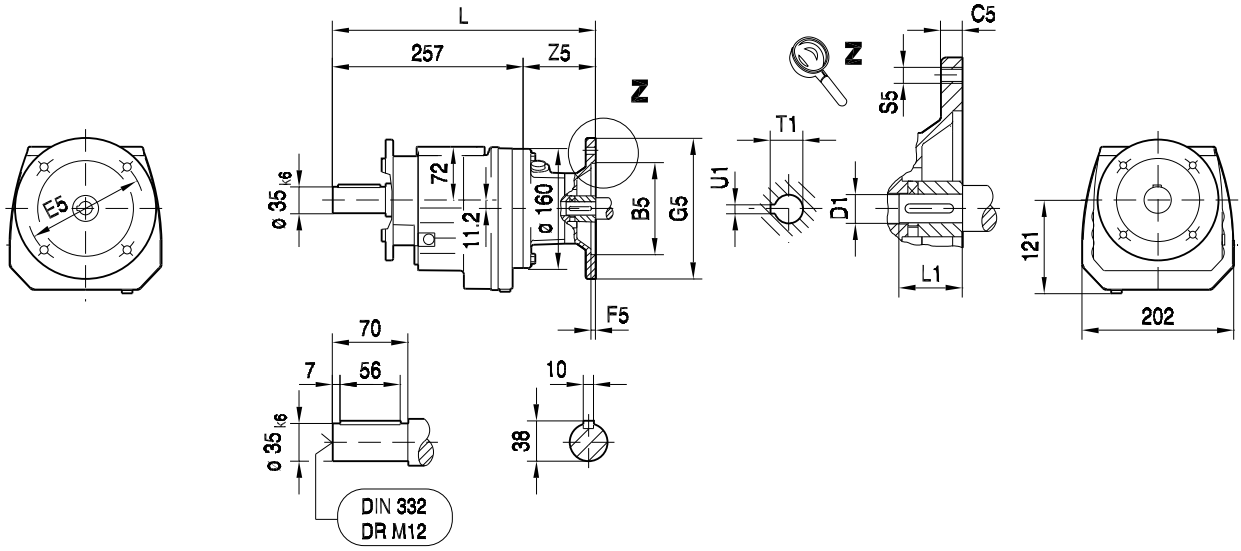

ø 160

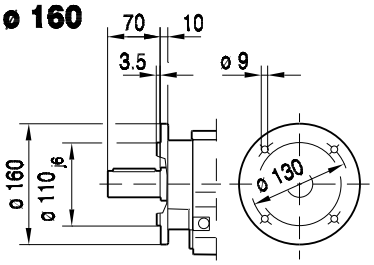

ø 200

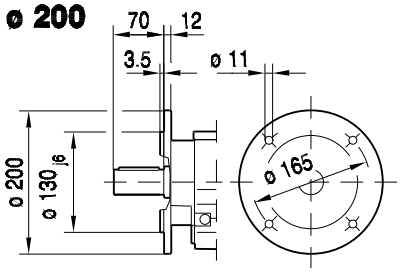

ø 250

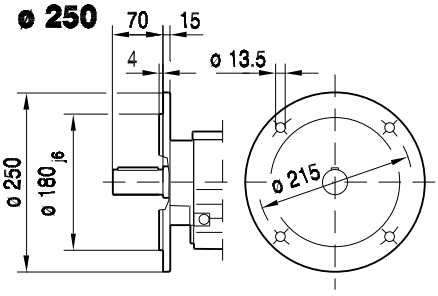

RM57..

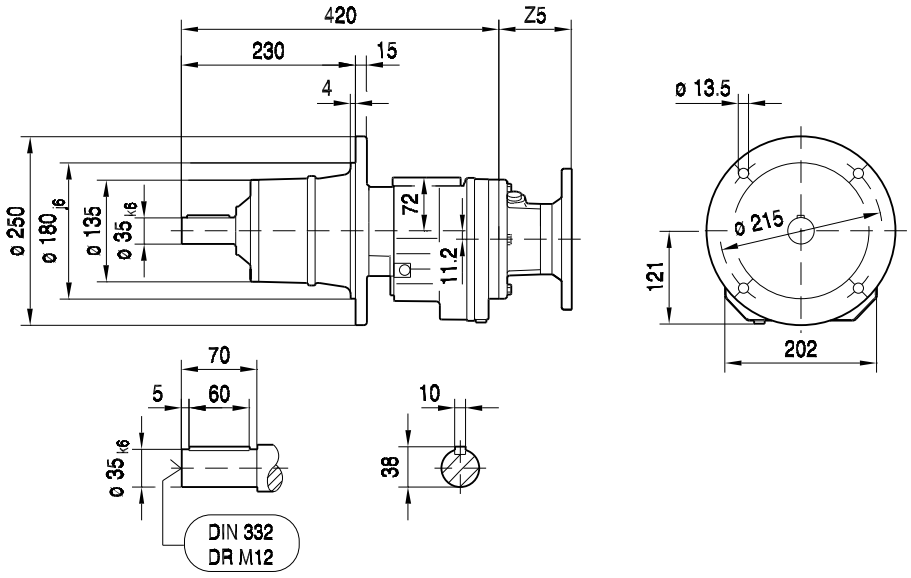

(→ 130)	B5	C5	E5	F5	G5	L	S5	Z5	D1	L1	T1	U1	
AM63	95	10	115	3.5	140	323	M8	66	11	23	12.8	4	
AM71	110	10	130	4.0	160	323	M8	66	14	30	16.3	5	
AM80	130	12	165	4.5	200	356	M10	99	19	40	21.8	6	
AM90	130	12	165	4.5	200	356	M10	99	24	50	27.3	8	
AM100	180	15	215	5.0	250	391	M12	134	28	60	31.3	8	
AM112	180	15	215	5.0	250	391	M12	134	28	60	31.3	8	
AM132S/M	230	16	265	5.0	300	448	M12	191	38	80	41.3	10	

01 007 00 07

RZ57..

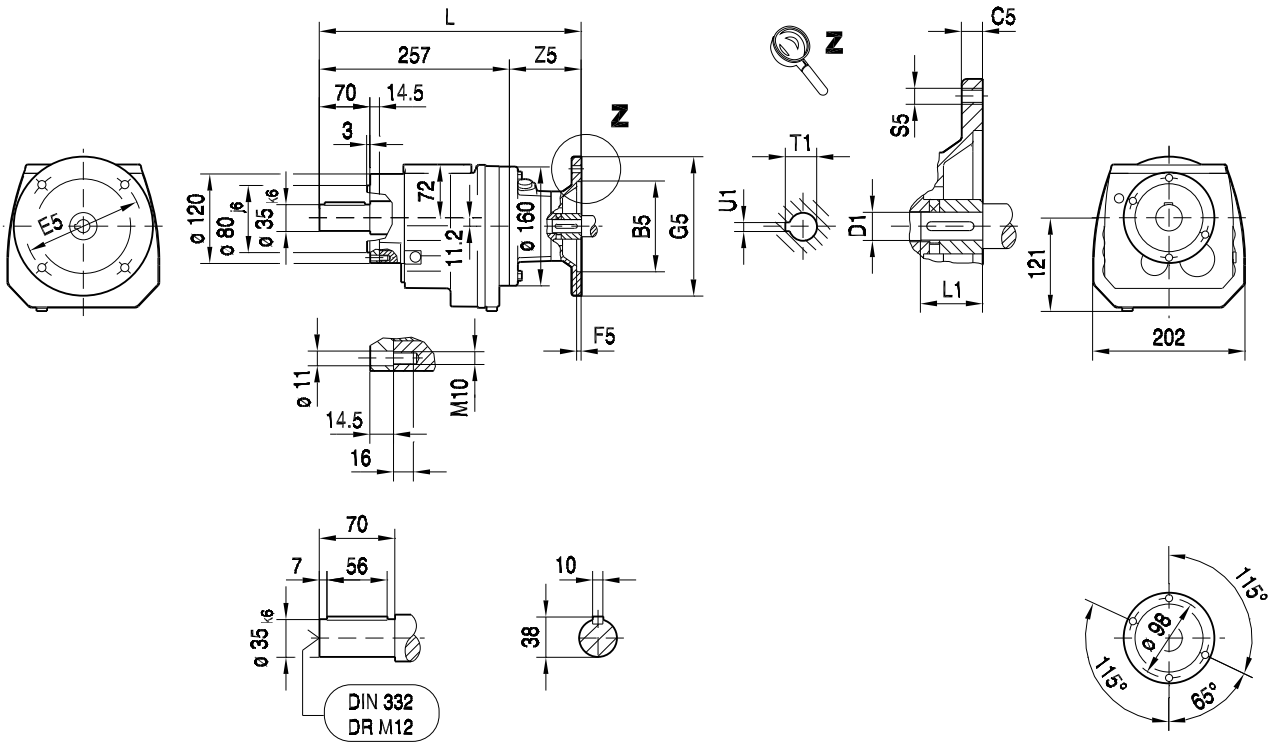

(→ 📖 130)	B5	C5	E5	F5	G5	L	S5	Z5	D1	L1	T1	U1	
AM63	95	10	115	3.5	140	323	M8	66	11	23	12.8	4	
AM71	110	10	130	4.0	160	323	M8	66	14	30	16.3	5	
AM80	130	12	165	4.5	200	356	M10	99	19	40	21.8	6	
AM90	130	12	165	4.5	200	356	M10	99	24	50	27.3	8	
AM100	180	15	215	5.0	250	391	M12	134	28	60	31.3	8	
AM112	180	15	215	5.0	250	391	M12	134	28	60	31.3	8	
AM132S/M	230	16	265	5.0	300	448	M12	191	38	80	41.3	10	

01 030 01 01

R67..

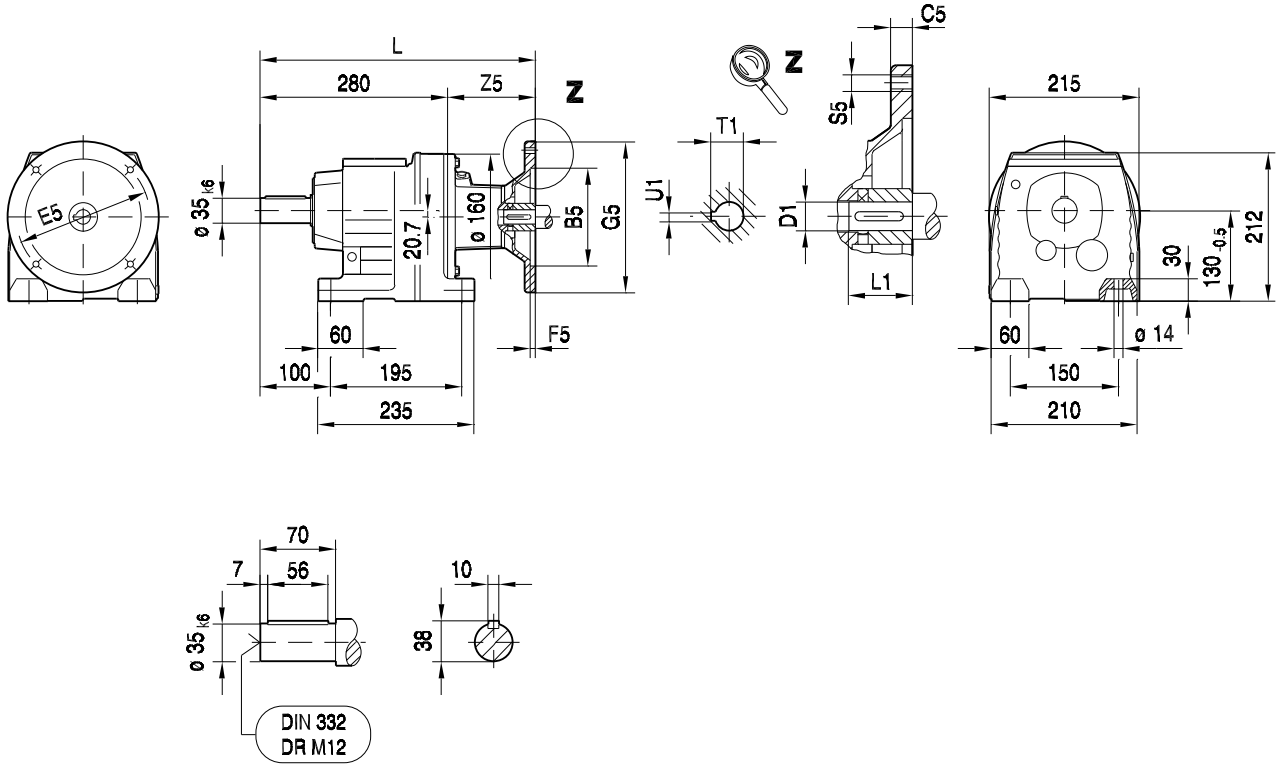

R67F..

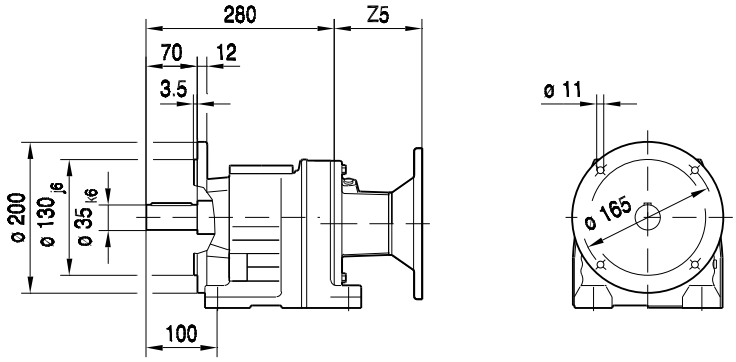

(→ 130)	B5	C5	E5	F5	G5	L	S5	Z5	D1	L1	T1	U1	
AM63	95	10	115	3.5	140	346	M8	66	11	23	12.8	4	
AM71	110	10	130	4.0	160	346	M8	66	14	30	16.3	5	
AM80	130	12	165	4.5	200	379	M10	99	19	40	21.8	6	
AM90	130	12	165	4.5	200	379	M10	99	24	50	27.3	8	
AM100	180	15	215	5.0	250	414	M12	134	28	60	31.3	8	
AM112	180	15	215	5.0	250	414	M12	134	28	60	31.3	8	
AM132S/M	230	16	265	5.0	300	471	M12	191	38	80	41.3	10	

01 031 02 01

RF67..

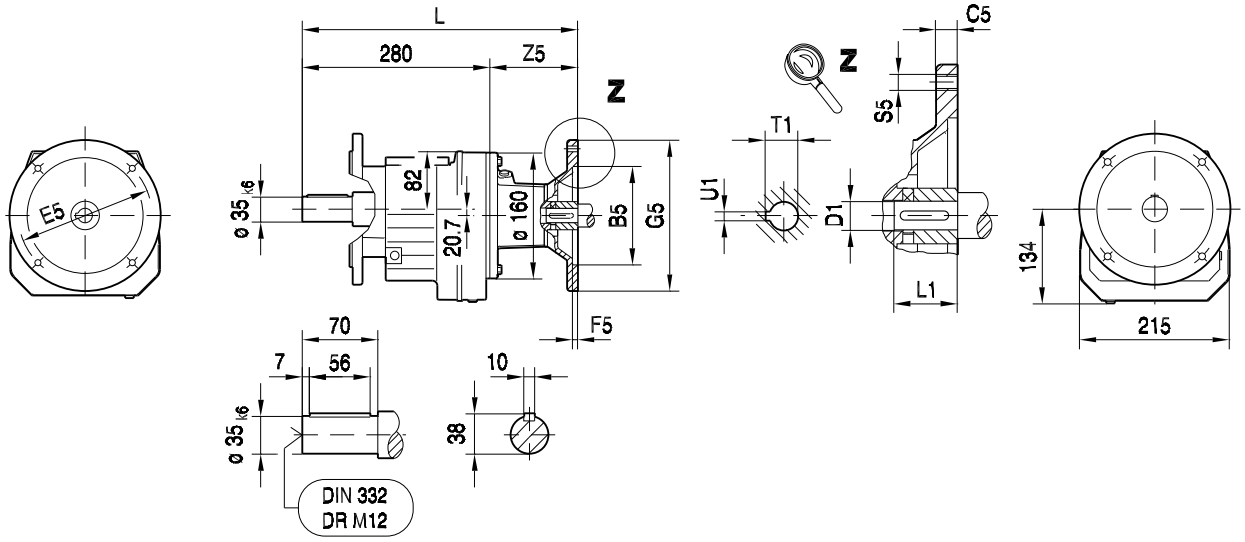

ø 200

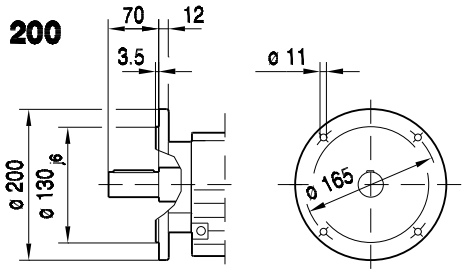

ø 250

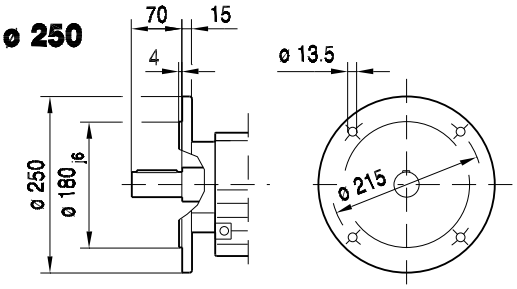

RM67..

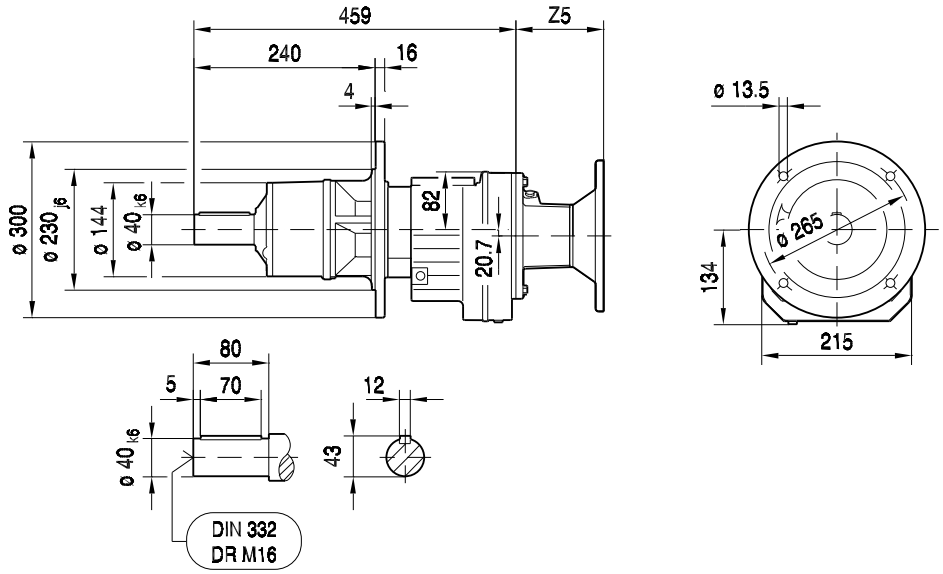

(→ 130)	B5	C5	E5	F5	G5	L	S5	Z5	D1	L1	T1	U1	
AM63	95	10	115	3.5	140	346	M8	66	11	23	12.8	4	
AM71	110	10	130	4.0	160	346	M8	66	14	30	16.3	5	
AM80	130	12	165	4.5	200	379	M10	99	19	40	21.8	6	
AM90	130	12	165	4.5	200	379	M10	99	24	50	27.3	8	
AM100	180	15	215	5.0	250	414	M12	134	28	60	31.3	8	
AM112	180	15	215	5.0	250	414	M12	134	28	60	31.3	8	
AM132S/M	230	16	265	5.0	300	471	M12	191	38	80	41.3	10	

01 008 00 07

RZ67..

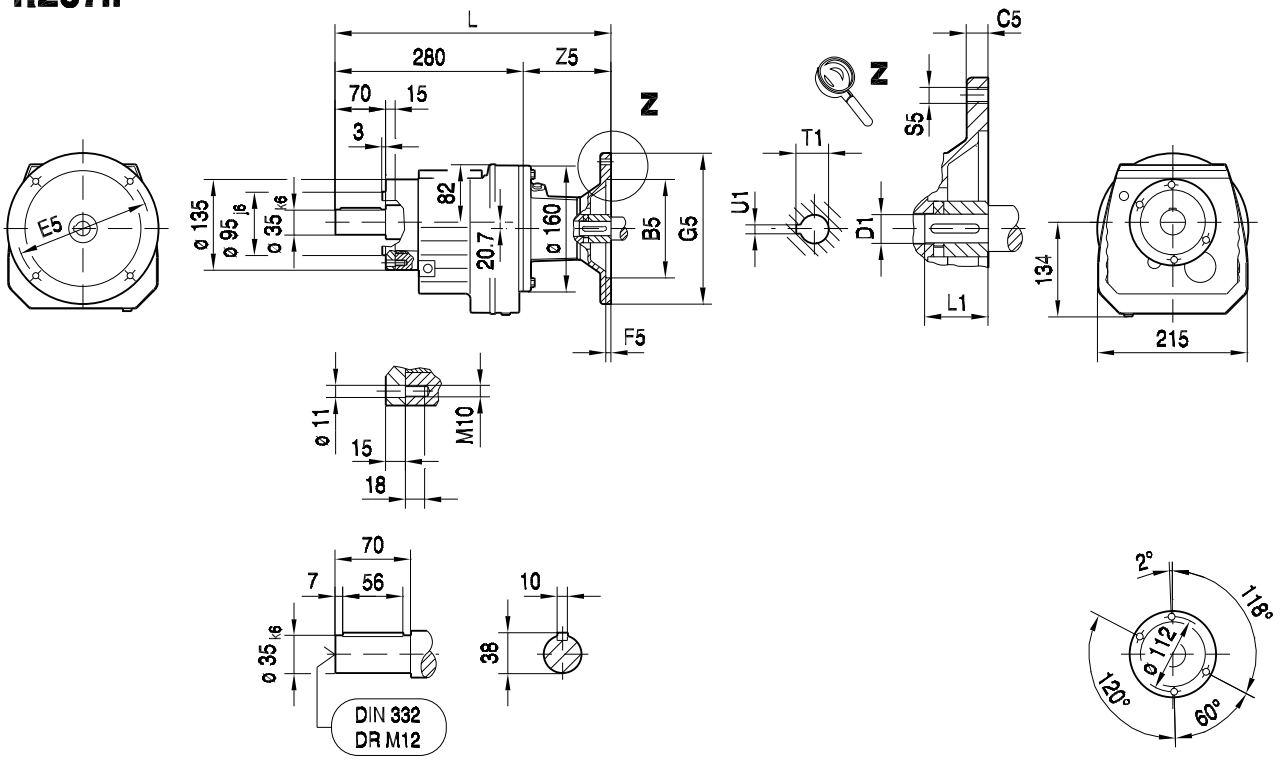

(→ 130)	B5	C5	E5	F5	G5	L	S5	Z5	D1	L1	T1	U1	
AM63	95	10	115	3.5	140	346	M8	66	11	23	12.8	4	
AM71	110	10	130	4.0	160	346	M8	66	14	30	16.3	5	
AM80	130	12	165	4.5	200	379	M10	99	19	40	21.8	6	
AM90	130	12	165	4.5	200	379	M10	99	24	50	27.3	8	
AM100	180	15	215	5.0	250	414	M12	134	28	60	31.3	8	
AM112	180	15	215	5.0	250	414	M12	134	28	60	31.3	8	
AM132S/M	230	16	265	5.0	300	471	M12	191	38	80	41.3	10	

01 032 02 01

R77..

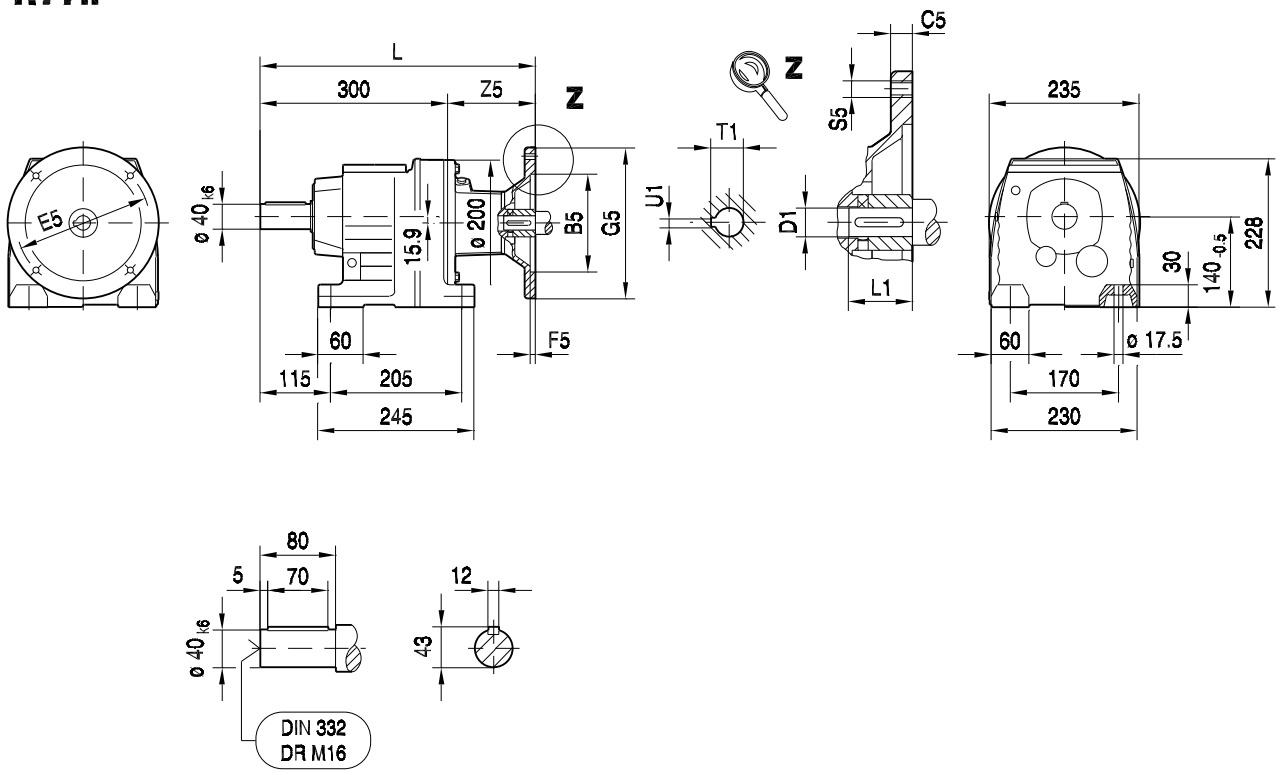

R77F..

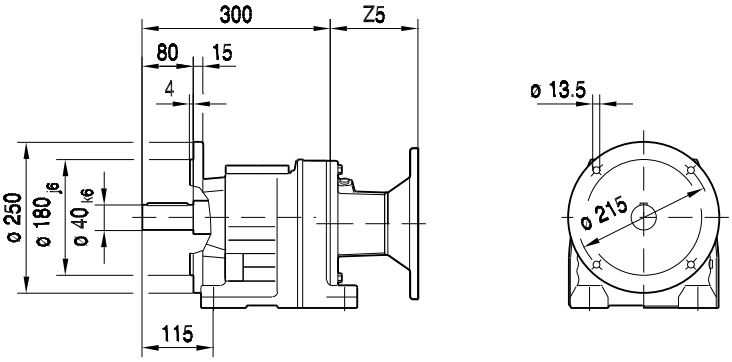

(→ 130)	B5	C5	E5	F5	G5	L	S5	Z5	D1	L1	T1	U1	
AM63	95	10	115	3.5	140	360	M8	60	11	23	12.8	4	
AM71	110	10	130	4.0	160	360	M8	60	14	30	16.3	5	
AM80	130	12	165	4.5	200	392	M10	92	19	40	21.8	6	
AM90	130	12	165	4.5	200	392	M10	92	24	50	27.3	8	
AM100	180	15	215	5.0	250	426	M12	126	28	60	31.3	8	
AM112	180	15	215	5.0	250	426	M12	126	28	60	31.3	8	
AM132S/M	230	16	265	5.0	300	479	M12	179	38	80	41.3	10	
AM132ML	230	16	265	5.0	300	479	M12	179	38	80	41.3	10	

01 033 02 01

RF77..

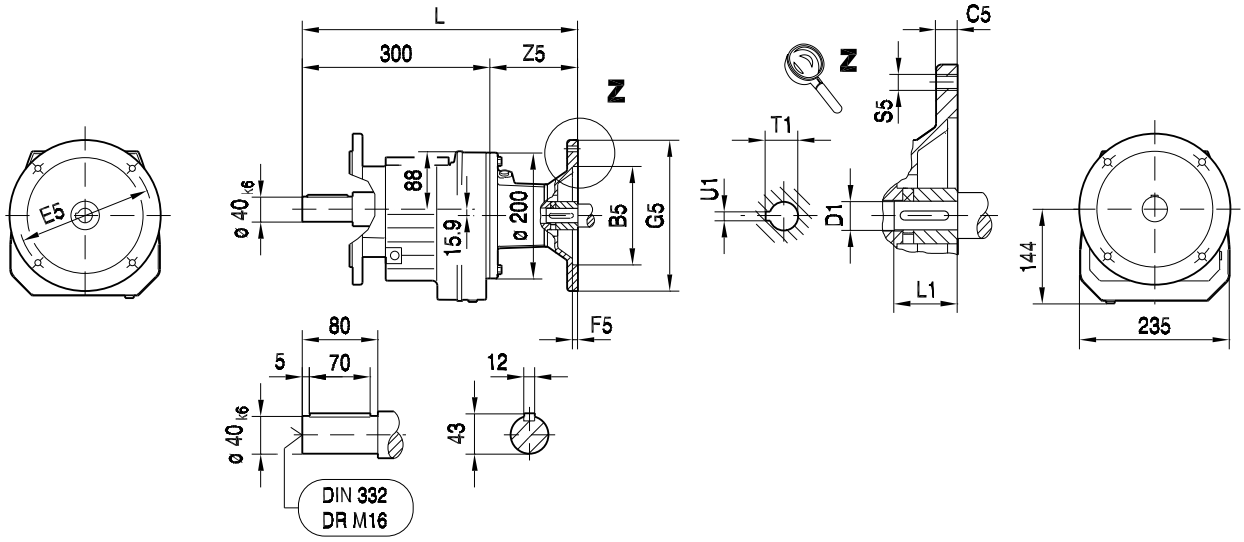

ø 250

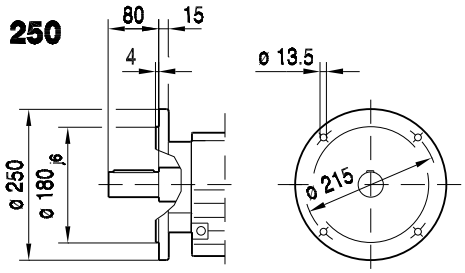

ø 300

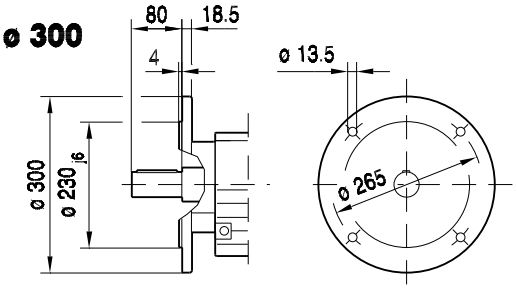

RM77..

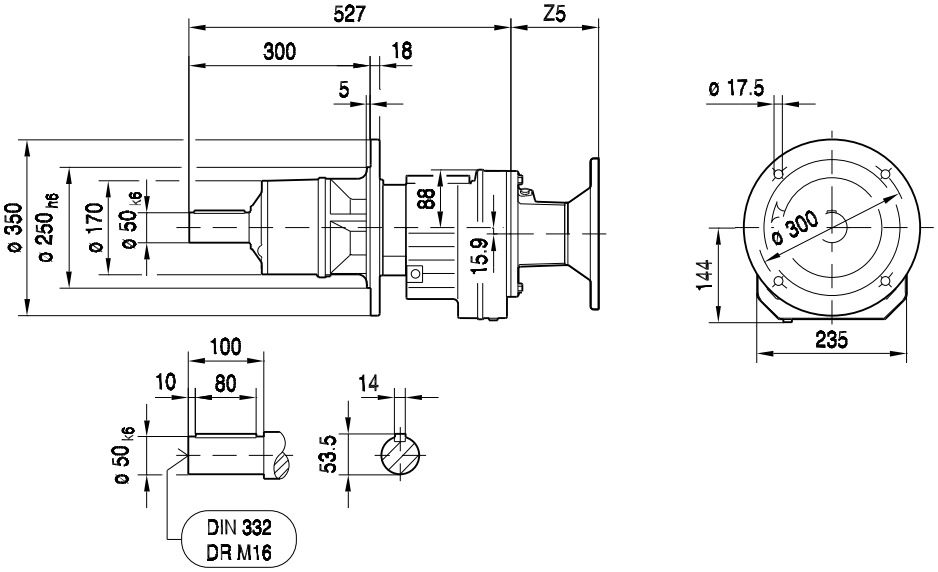

(→ 130)	B5	C5	E5	F5	G5	L	S5	Z5	D1	L1	T1	U1	
AM63	95	10	115	3.5	140	360	M8	60	11	23	12.8	4	
AM71	110	10	130	4.0	160	360	M8	60	14	30	16.3	5	
AM80	130	12	165	4.5	200	392	M10	92	19	40	21.8	6	
AM90	130	12	165	4.5	200	392	M10	92	24	50	27.3	8	
AM100	180	15	215	5.0	250	426	M12	126	28	60	31.3	8	
AM112	180	15	215	5.0	250	426	M12	126	28	60	31.3	8	
AM132S/M	230	16	265	5.0	300	479	M12	179	38	80	41.3	10	
AM132ML	230	16	265	5.0	300	479	M12	179	38	80	41.3	10	

01 009 00 07

RZ77..

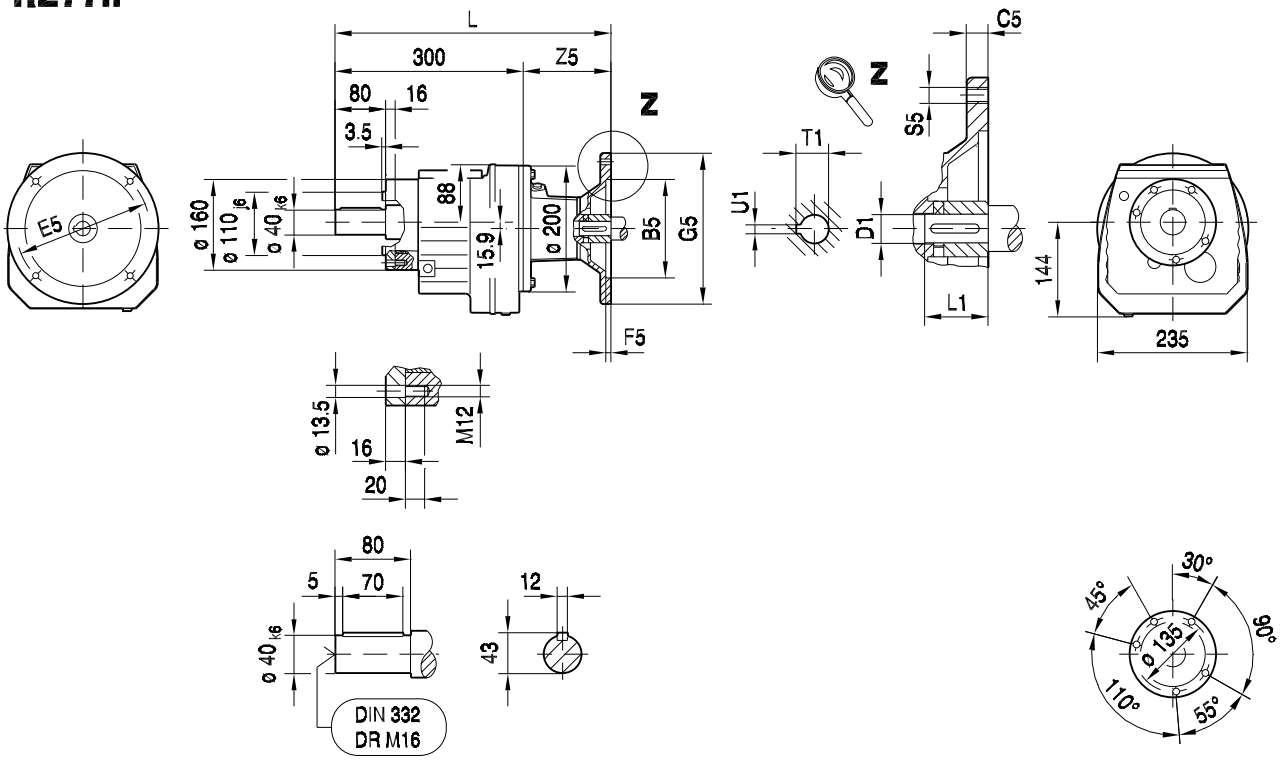

(→ 📖 130)	B5	C5	E5	F5	G5	L	S5	Z5	D1	L1	T1	U1	
AM63	95	10	115	3.5	140	360	M8	60	11	23	12.8	4	
AM71	110	10	130	4.0	160	360	M8	60	14	30	16.3	5	
AM80	130	12	165	4.5	200	392	M10	92	19	40	21.8	6	
AM90	130	12	165	4.5	200	392	M10	92	24	50	27.3	8	
AM100	180	15	215	5.0	250	426	M12	126	28	60	31.3	8	
AM112	180	15	215	5.0	250	426	M12	126	28	60	31.3	8	
AM132S/M	230	16	265	5.0	300	479	M12	179	38	80	41.3	10	
AM132ML	230	16	265	5.0	300	479	M12	179	38	80	41.3	10	

01 034 01 01

R87..

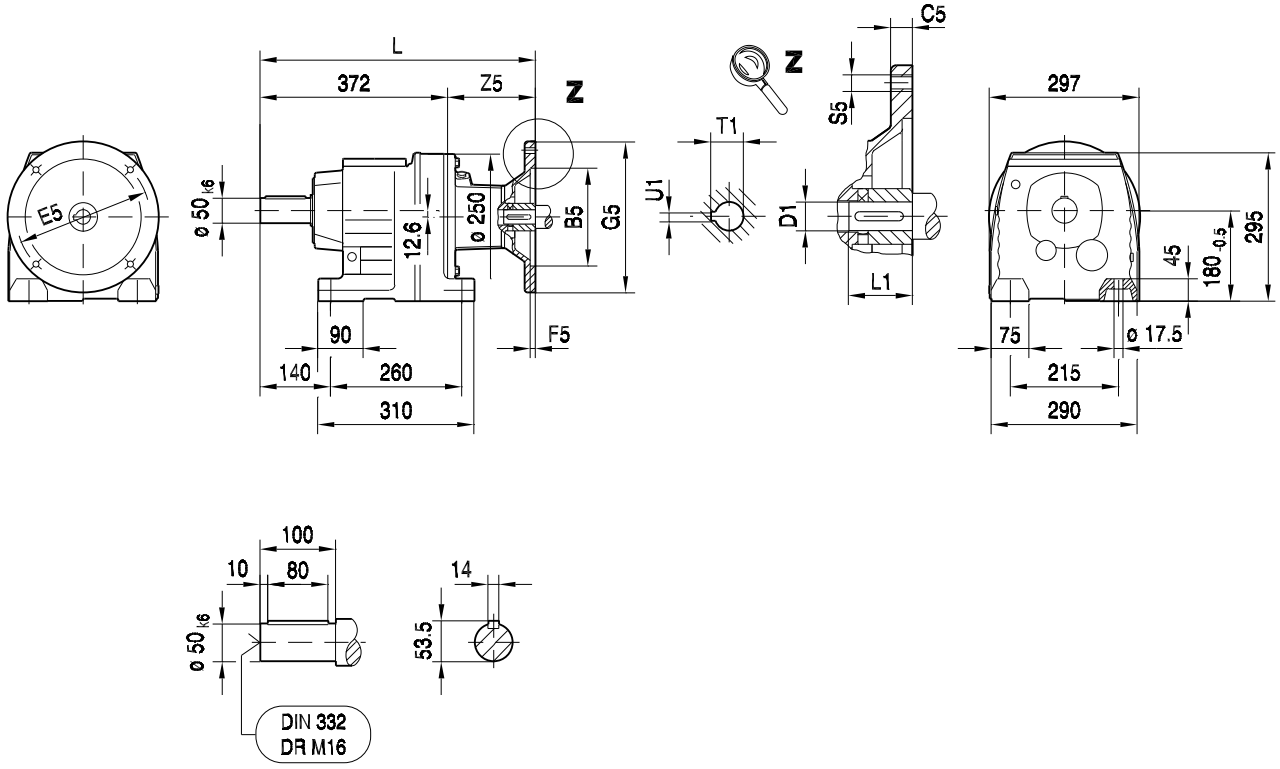

R87F..

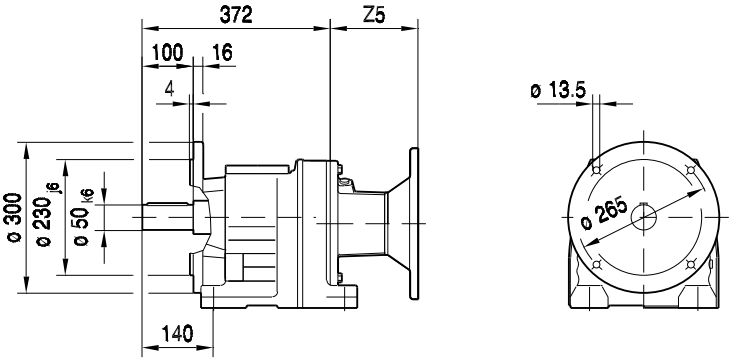

(→ 130)	B5	C5	E5	F5	G5	L	S5	Z5	D1	L1	T1	U1	
AM80	130	12	165	4.5	200	459	M10	87	19	40	21.8	6	
AM90	130	12	165	4.5	200	459	M10	87	24	50	27.3	8	
AM100	180	15	215	5.0	250	493	M12	121	28	60	31.3	8	
AM112	180	15	215	5.0	250	493	M12	121	28	60	31.3	8	
AM132S/M	230	16	265	5.0	300	546	M12	174	38	80	41.3	10	
AM132ML	230	16	265	5.0	300	546	M12	174	38	80	41.3	10	
AM160	250	18	300	6.0	350	604	M16	232	42	110	45.3	12	
AM180	250	18	300	6.0	350	604	M16	232	48	110	51.8	14	

01 035 01 01

RF87..

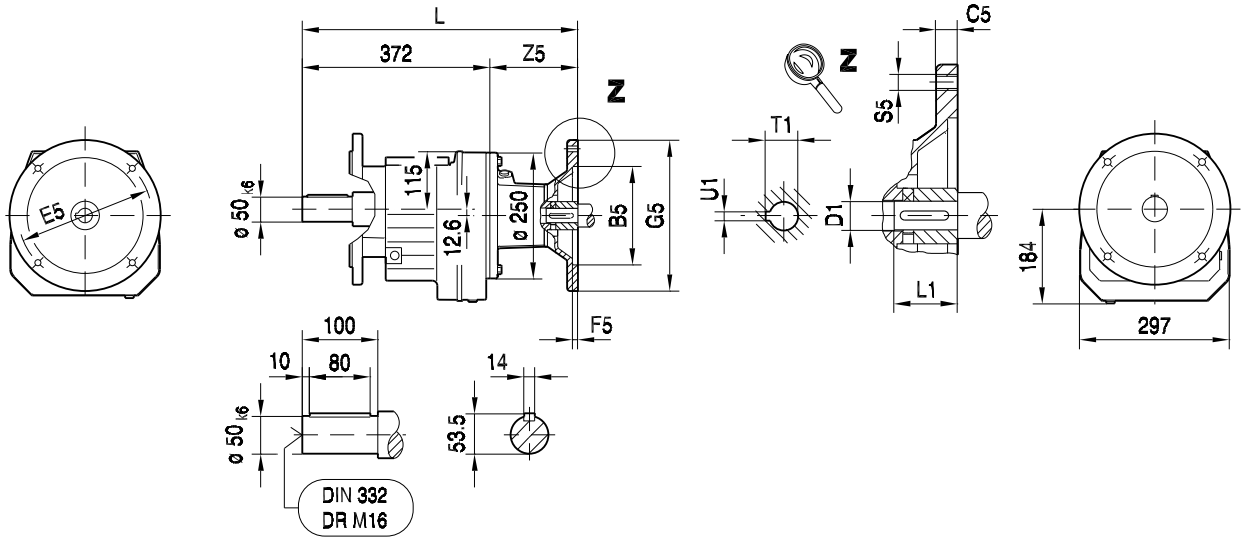

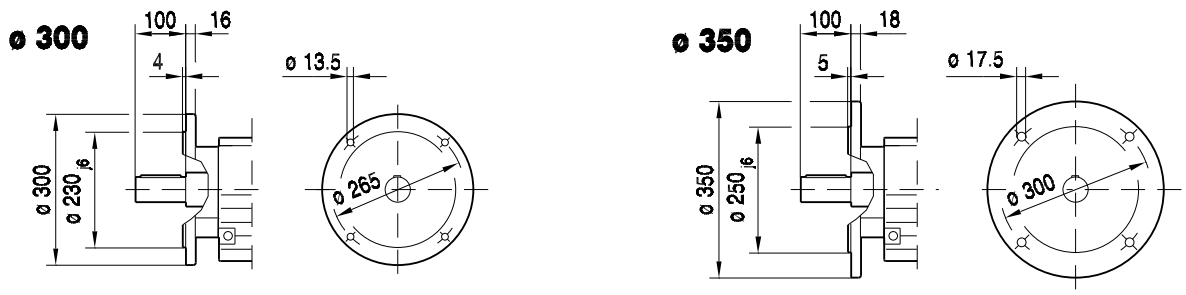

RM87..

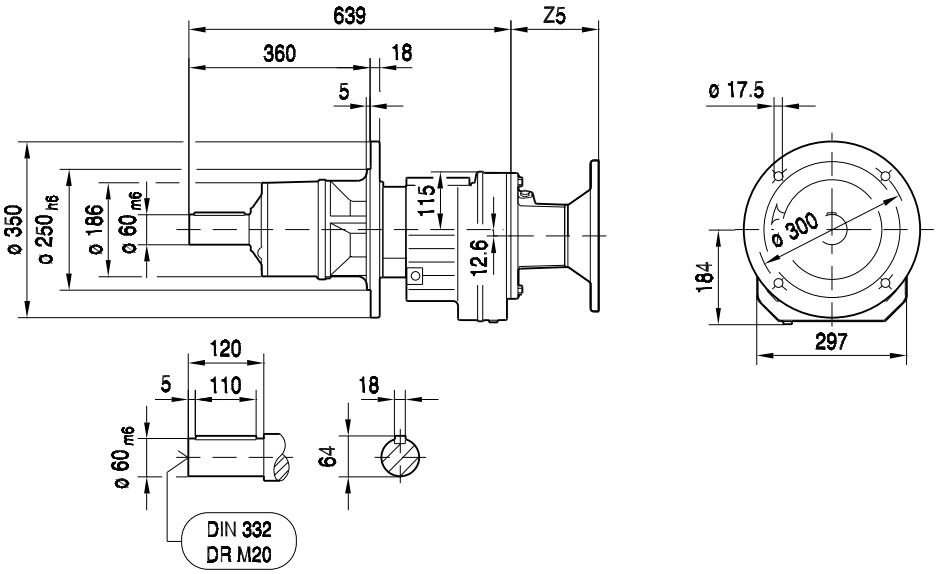

(→ 📖 130)	B5	C5	E5	F5	G5	L	S5	Z5	D1	L1	T1	U1	
AM80	130	12	165	4.5	200	459	M10	87	19	40	21.8	6	
AM90	130	12	165	4.5	200	459	M10	87	24	50	27.3	8	
AM100	180	15	215	5.0	250	493	M12	121	28	60	31.3	8	
AM112	180	15	215	5.0	250	493	M12	121	28	60	31.3	8	
AM132S/M	230	16	265	5.0	300	546	M12	174	38	80	41.3	10	
AM132ML	230	16	265	5.0	300	546	M12	174	38	80	41.3	10	
AM160	250	18	300	6.0	350	604	M16	232	42	110	45.3	12	
AM180	250	18	300	6.0	350	604	M16	232	48	110	51.8	14	

01 010 00 07

RZ87..

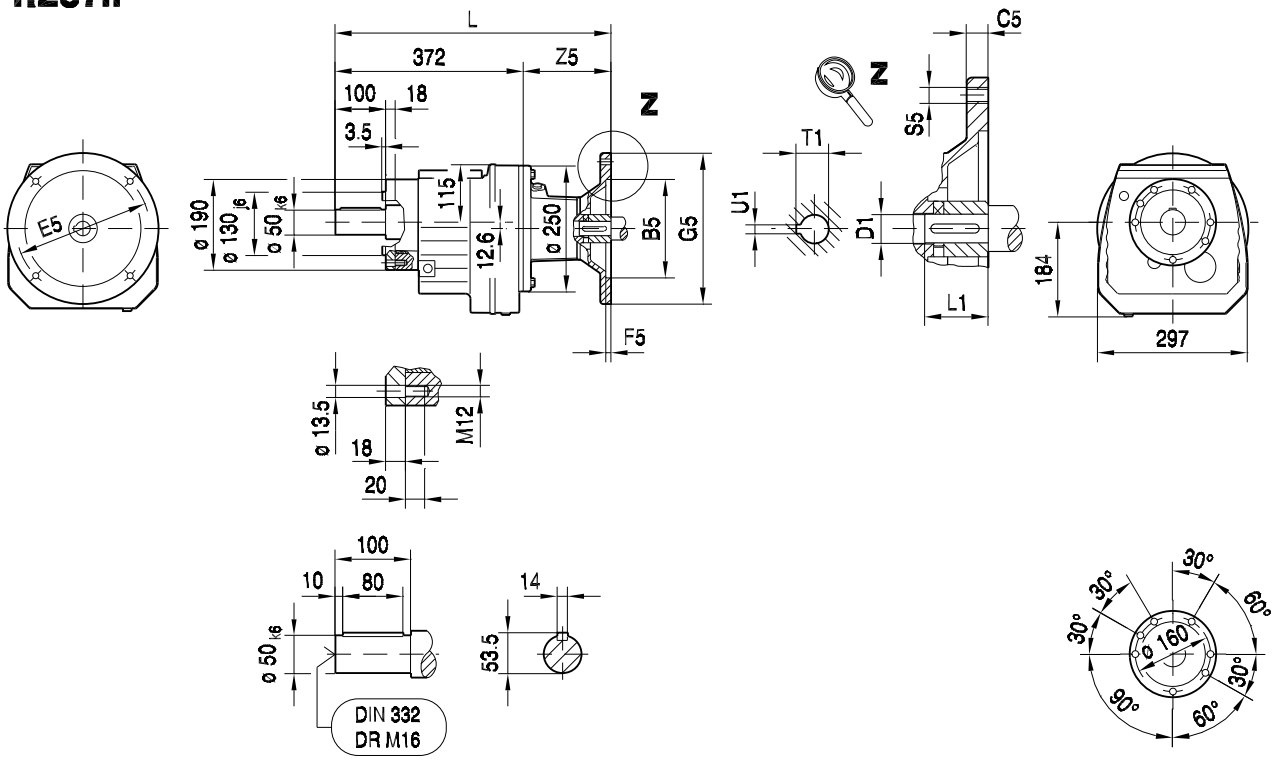

(→ 130)	B5	C5	E5	F5	G5	L	S5	Z5	D1	L1	T1	U1	
AM80	130	12	165	4.5	200	459	M10	87	19	40	21.8	6	
AM90	130	12	165	4.5	200	459	M10	87	24	50	27.3	8	
AM100	180	15	215	5.0	250	493	M12	121	28	60	31.3	8	
AM112	180	15	215	5.0	250	493	M12	121	28	60	31.3	8	
AM132S/M	230	16	265	5.0	300	546	M12	174	38	80	41.3	10	
AM132ML	230	16	265	5.0	300	546	M12	174	38	80	41.3	10	
AM160	250	18	300	6.0	350	604	M16	232	42	110	45.3	12	
AM180	250	18	300	6.0	350	604	M16	232	48	110	51.8	14	

01 036 01 01

R97..

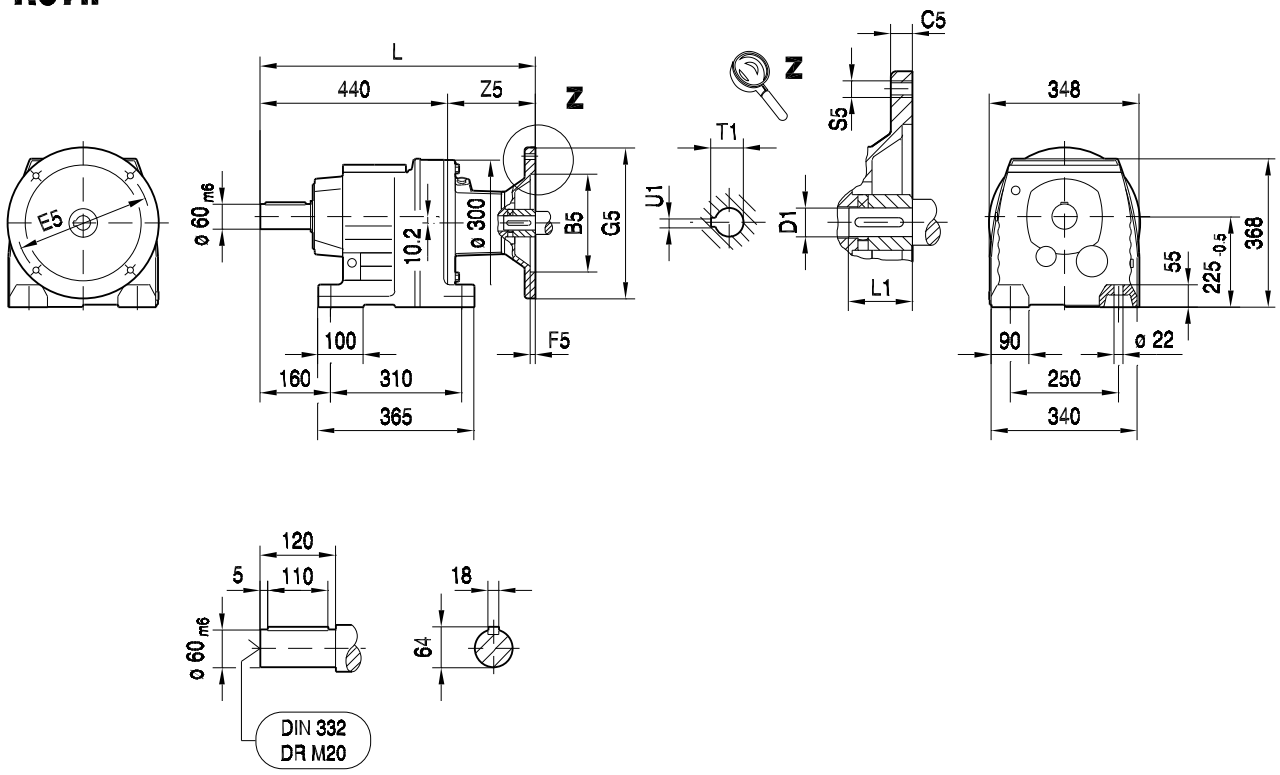

(→ 130)	B5	C5	E5	F5	G5	L	S5	Z5	D1	L1	T1	U1	
AM100	180	15	215	5.0	250	556	M12	116	28	60	31.3	8	
AM112	180	15	215	5.0	250	556	M12	116	28	60	31.3	8	
AM132S/M	230	16	265	5.0	300	609	M12	169	38	80	41.3	10	
AM132ML	230	16	265	5.0	300	609	M12	169	38	80	41.3	10	
AM160	250	18	300	6.0	350	667	M16	227	42	110	45.3	12	
AM180	250	18	300	6.0	350	667	M16	227	48	110	51.8	14	
AM200	300	20	350	7.0	400	708	M16	268	55	110	59.3	16	

01 037 01 01

RF97..

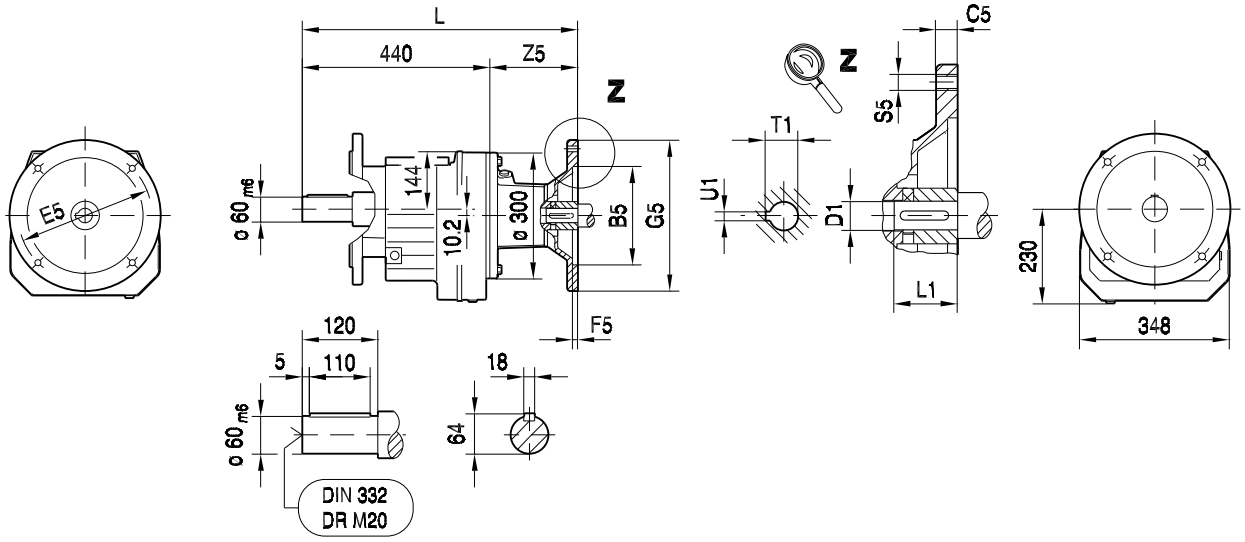

ø 350

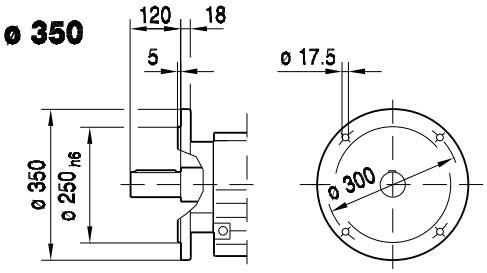

ø 450

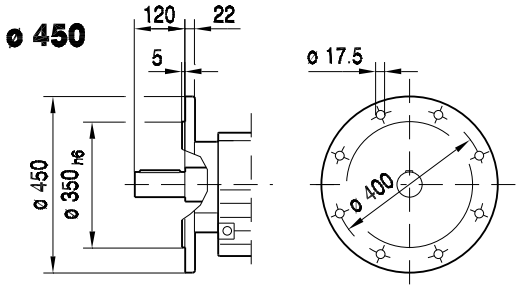

RM97..

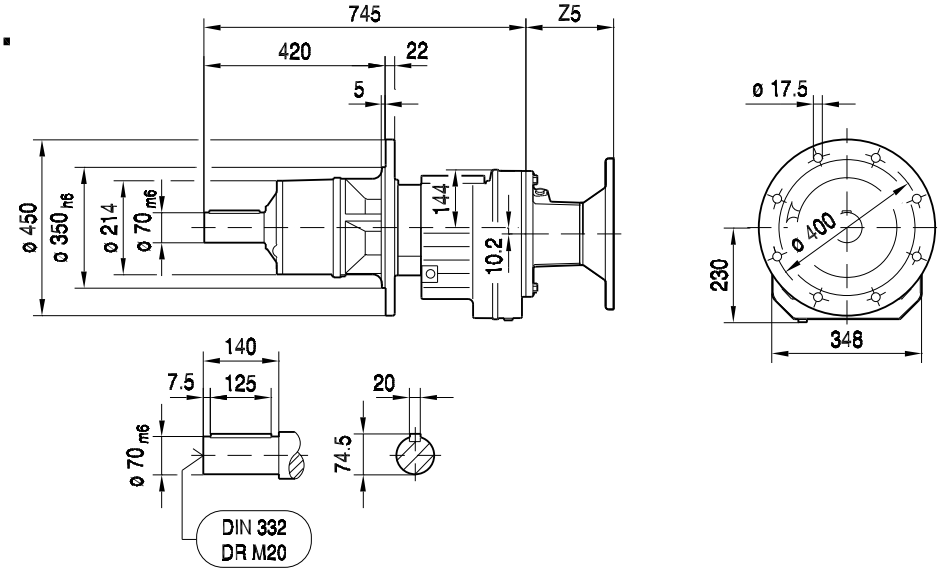

(→ 130)	B5	C5	E5	F5	G5	L	S5	Z5	D1	L1	T1	U1	
AM100	180	15	215	5.0	250	556	M12	116	28	60	31.3	8	
AM112	180	15	215	5.0	250	556	M12	116	28	60	31.3	8	
AM132S/M	230	16	265	5.0	300	609	M12	169	38	80	41.3	10	
AM132ML	230	16	265	5.0	300	609	M12	169	38	80	41.3	10	
AM160	250	18	300	6.0	350	667	M16	227	42	110	45.3	12	
AM180	250	18	300	6.0	350	667	M16	227	48	110	51.8	14	
AM200	300	20	350	7.0	400	708	M16	268	55	110	59.3	16	

01 038 01 01

R107..

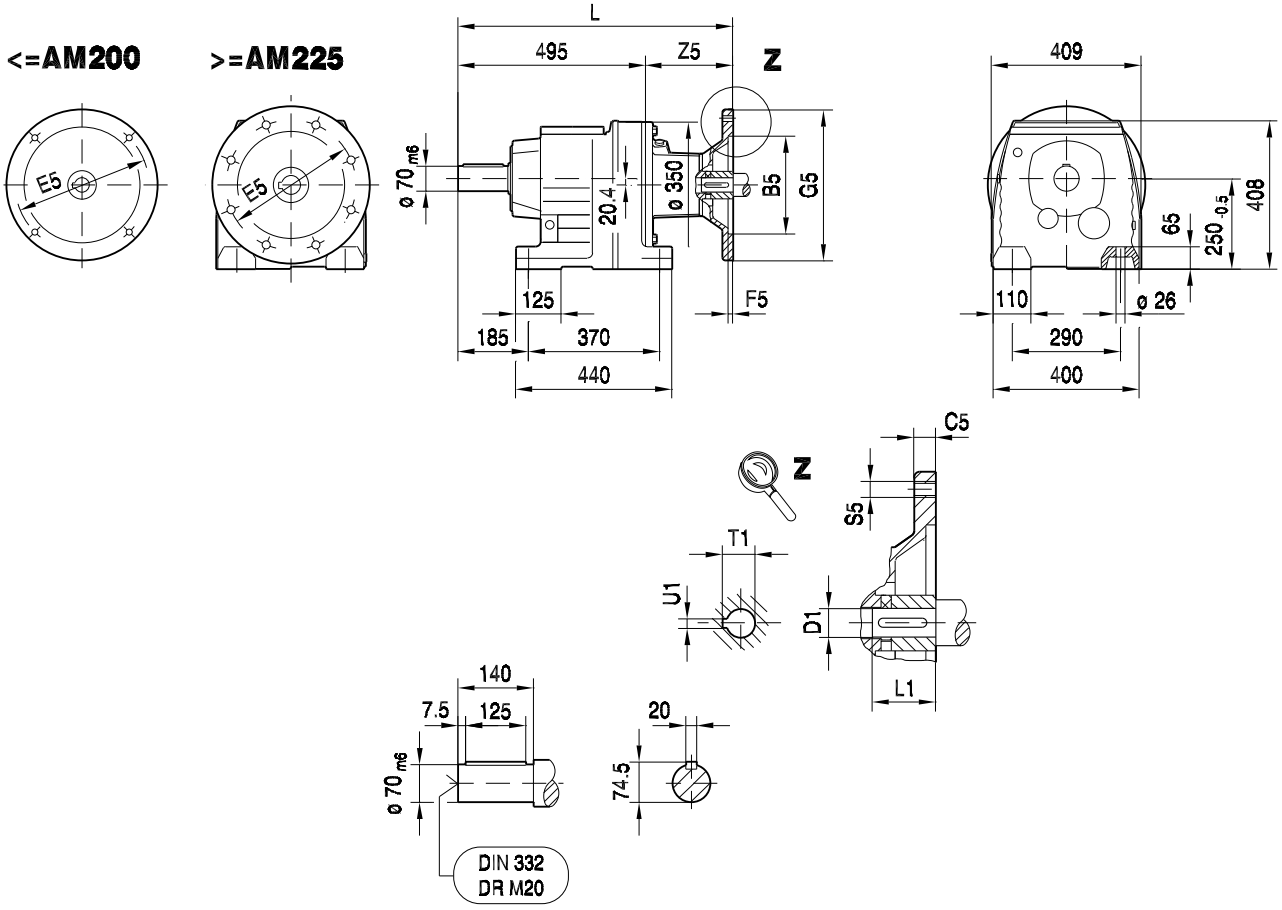

(→ 130)	B5	C5	E5	F5	G5	L	S5	Z5	D1	L1	T1	U1	
AM100	180	15	215	5.0	250	605	M12	110	28	60	31.3	8	
AM112	180	15	215	5.0	250	605	M12	110	28	60	31.3	8	
AM132S/M	230	16	265	5.0	300	658	M12	163	38	80	41.3	10	
AM132ML	230	16	265	5.0	300	658	M12	163	38	80	41.3	10	
AM160	250	18	300	6.0	350	716	M16	221	42	110	45.3	12	
AM180	250	18	300	6.0	350	716	M16	221	48	110	51.8	14	
AM200	300	20	350	7.0	400	757	M16	262	55	110	59.3	16	
AM225	350	22	400	7.0	450	772	M16	277	60	140	64.4	18	

01 039 01 01

RF107..

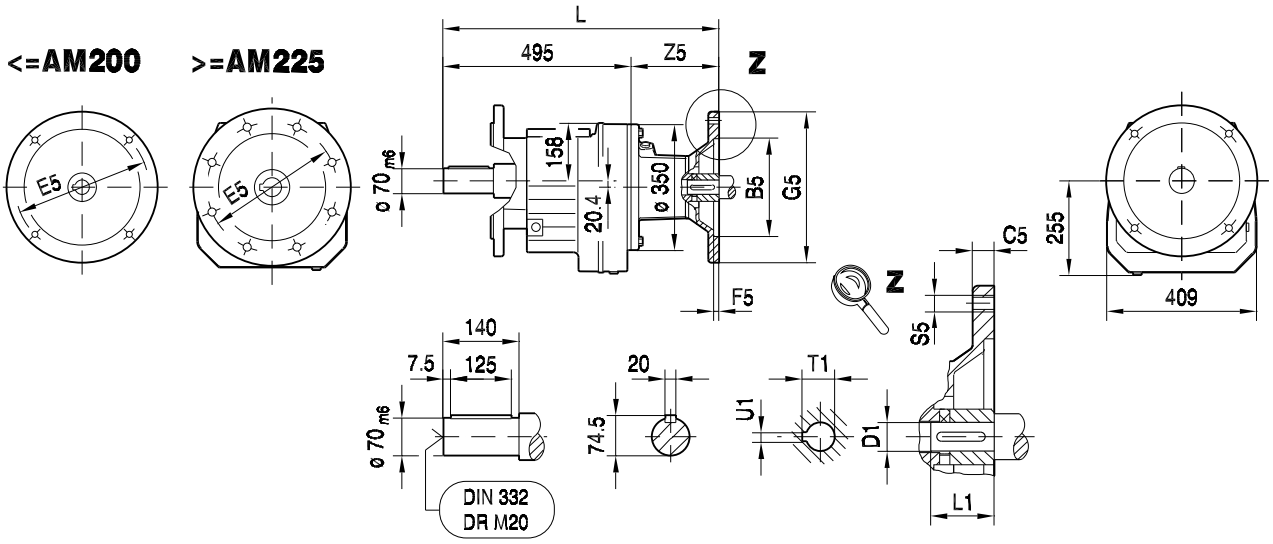

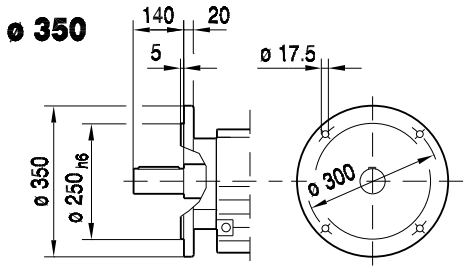

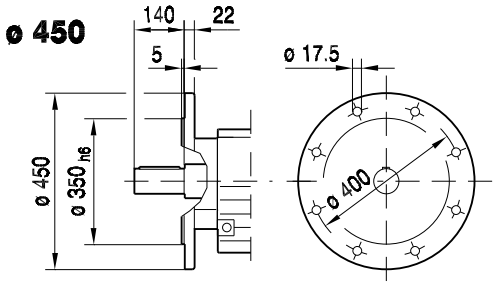

RM107..

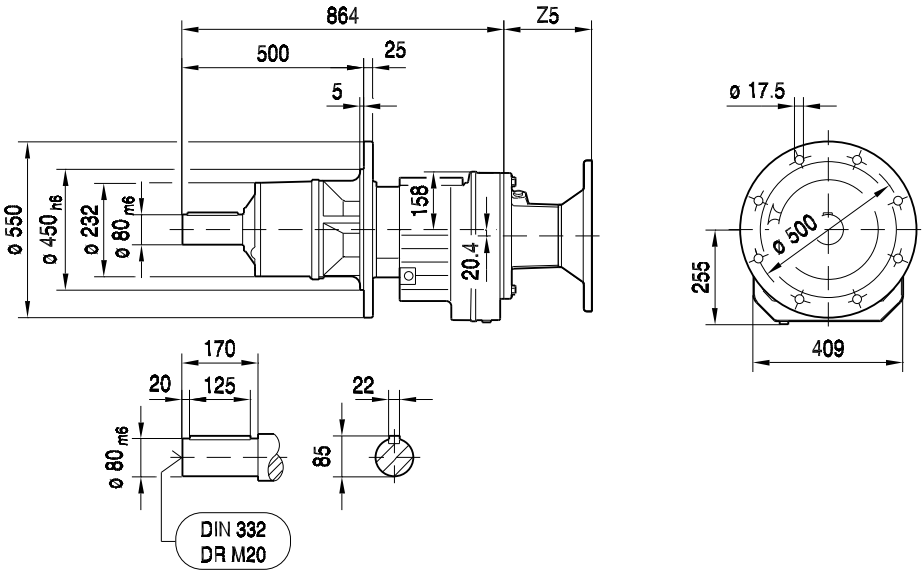

(→ 130)	B5	C5	E5	F5	G5	L	S5	Z5	D1	L1	T1	U1	
AM100	180	15	215	5.0	250	605	M12	110	28	60	31.3	8	
AM112	180	15	215	5.0	250	605	M12	110	28	60	31.3	8	
AM132S/M	230	16	265	5.0	300	658	M12	163	38	80	41.3	10	
AM132ML	230	16	265	5.0	300	658	M12	163	38	80	41.3	10	
AM160	250	18	300	6.0	350	716	M16	221	42	110	45.3	12	
AM180	250	18	300	6.0	350	716	M16	221	48	110	51.8	14	
AM200	300	20	350	7.0	400	757	M16	262	55	110	59.3	16	
AM225	350	22	400	7.0	450	772	M16	277	60	140	64.4	18	

01 040 01 01

R137..

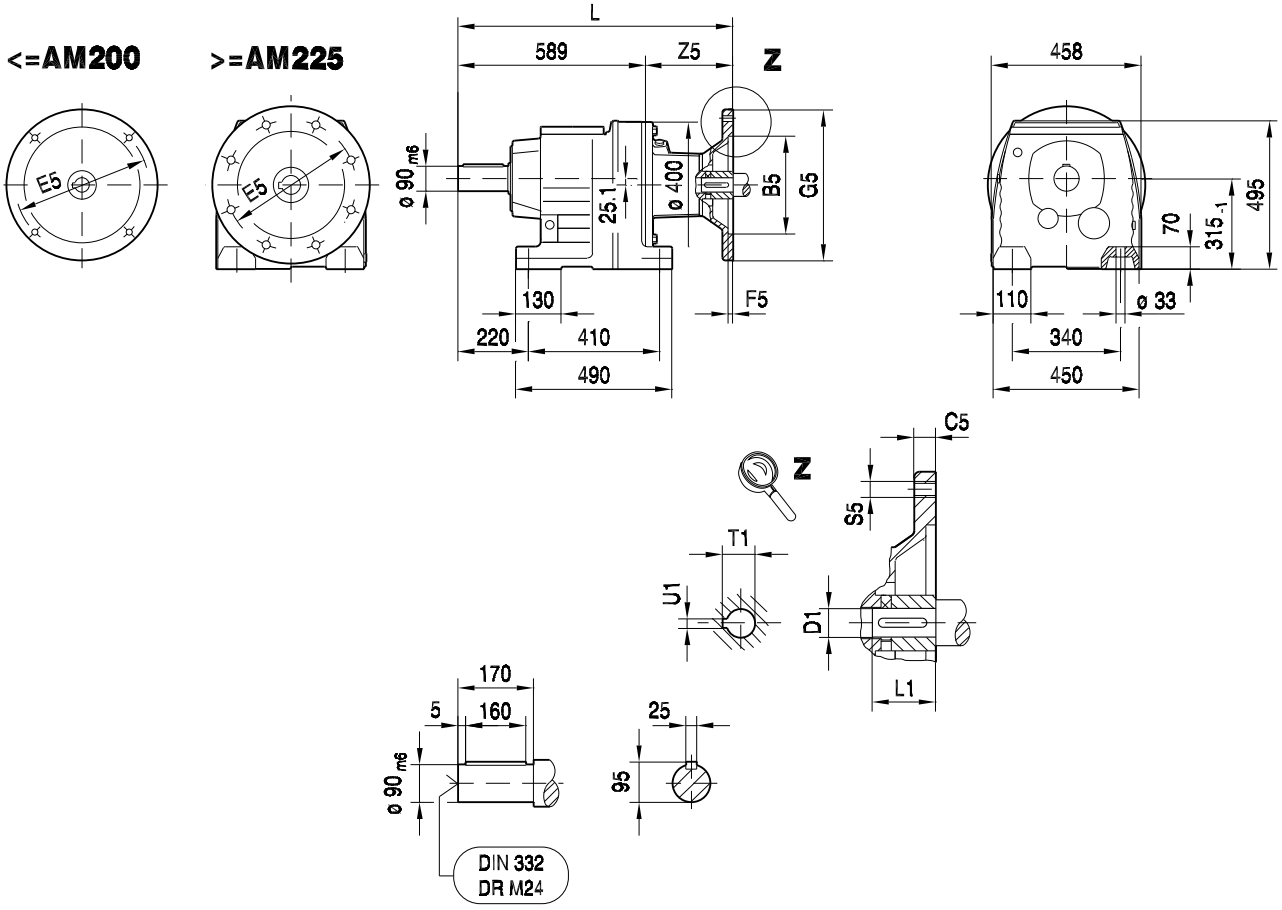

(→ 130)	B5	C5	E5	F5	G5	L	S5	Z5	D1	L1	T1	U1	
AM132S/M	230	16	265	5.0	300	745	M12	156	38	80	41.3	10	
AM132ML	230	16	265	5.0	300	745	M12	156	38	80	41.3	10	
AM160	250	18	300	6.0	350	803	M16	214	42	110	45.3	12	
AM180	250	18	300	6.0	350	803	M16	214	48	110	51.8	14	
AM200	300	20	350	7.0	400	844	M16	255	55	110	59.3	16	
AM225	350	22	400	7.0	450	859	M16	270	60	140	64.4	18	

01 041 01 01

RF137..

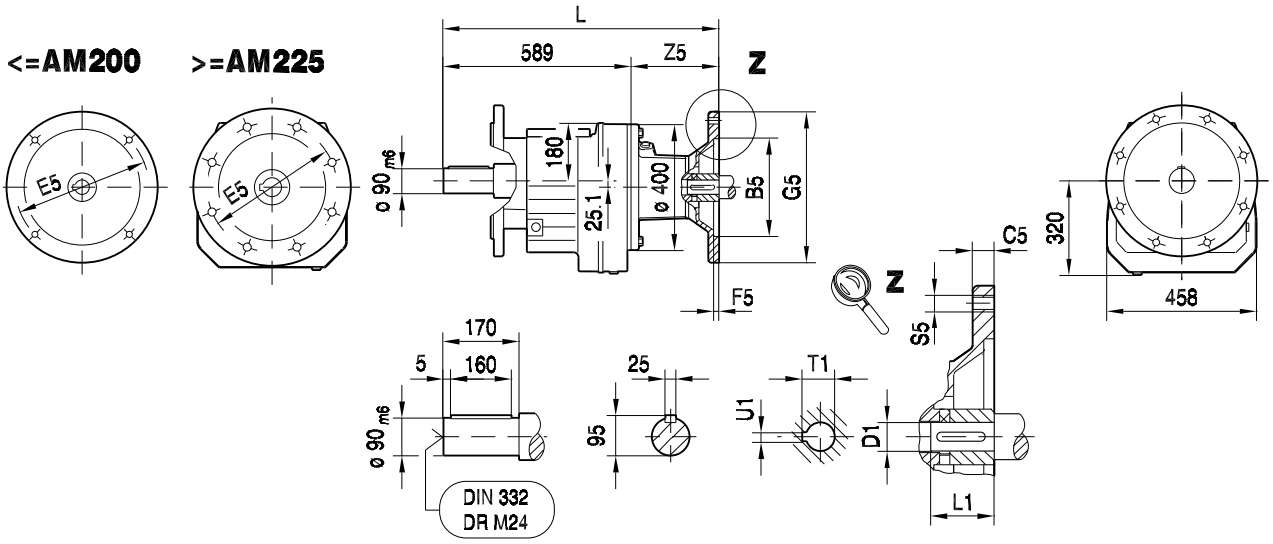

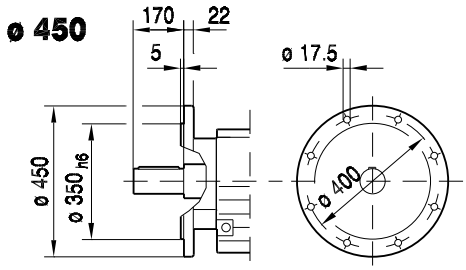

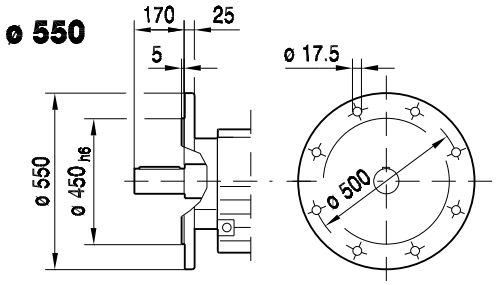

RM137..

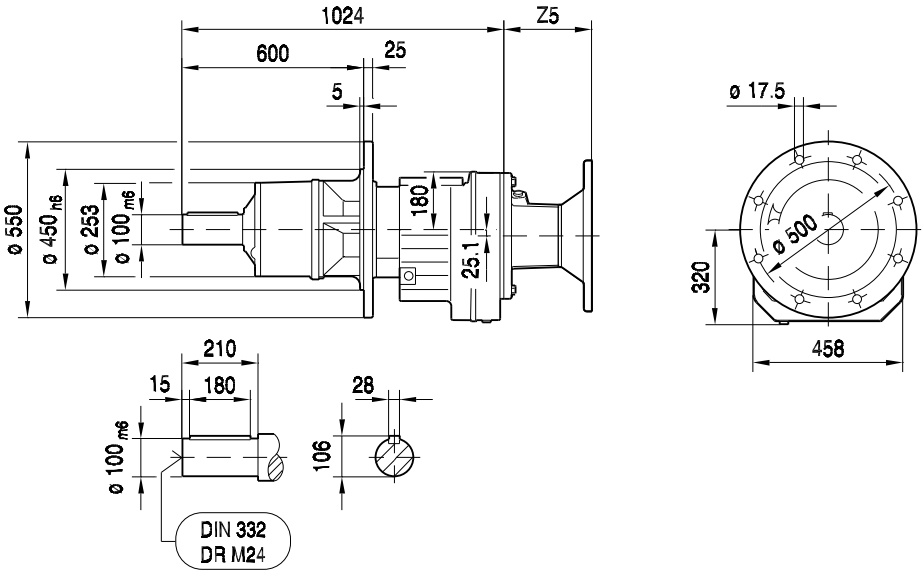

(→ 130)	B5	C5	E5	F5	G5	L	S5	Z5	D1	L1	T1	U1	
AM132S/M	230	16	265	5.0	300	745	M12	156	38	80	41.3	10	
AM132ML	230	16	265	5.0	300	745	M12	156	38	80	41.3	10	
AM160	250	18	300	6.0	350	803	M16	214	42	110	45.3	12	
AM180	250	18	300	6.0	350	803	M16	214	48	110	51.8	14	
AM200	300	20	350	7.0	400	844	M16	255	55	110	59.3	16	
AM225	350	22	400	7.0	450	859	M16	270	60	140	64.4	18	

01 042 01 01

R147..

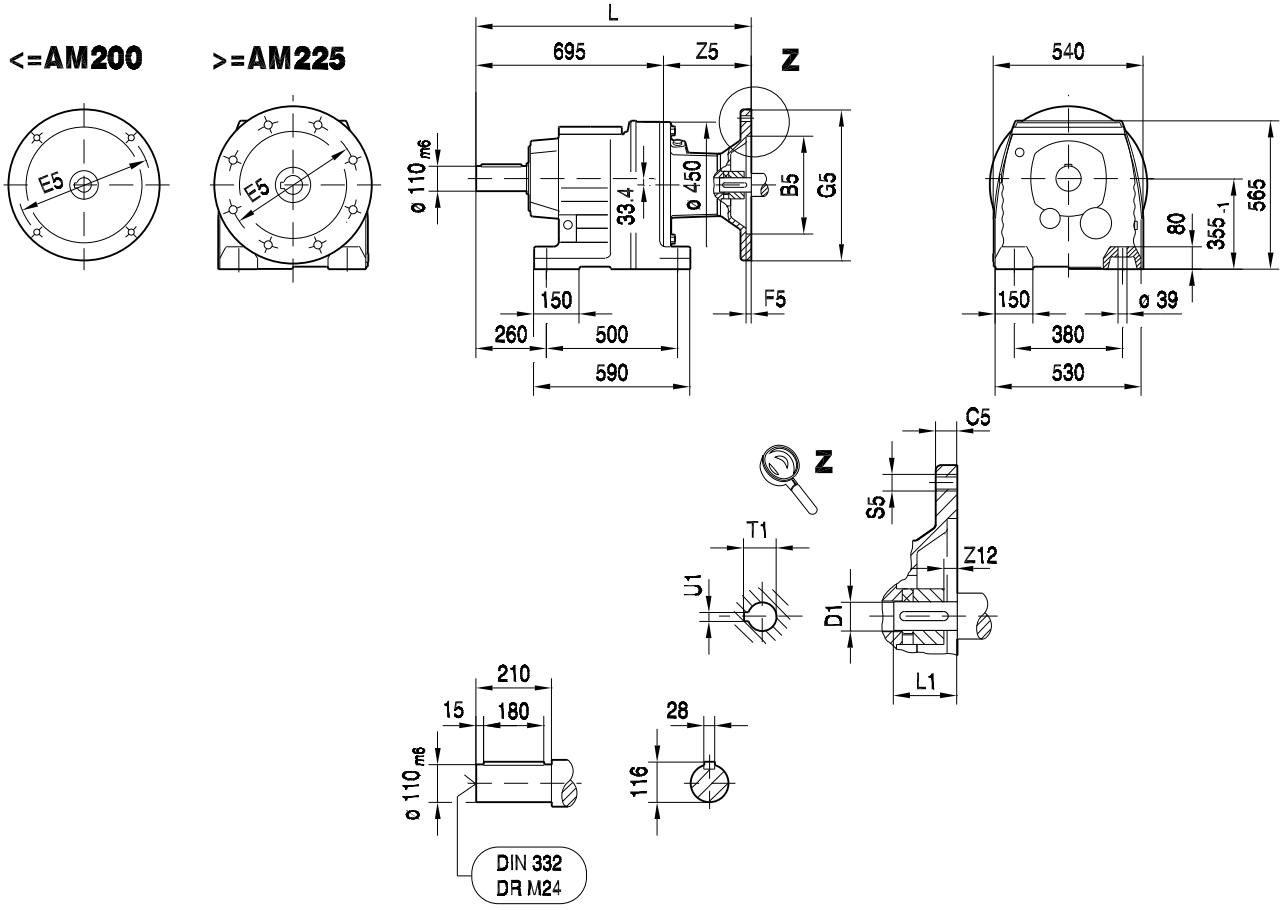

(→ 130)	B5	C5	E5	F5	G5	L	S5	Z5	Z12	D1	L1	T1	U1
AM132ML	230	16	265	5.0	300	843	M12	148	0	38	80	41.3	10
AM160	250	18	300	6.0	350	901	M16	206	0	42	110	45.3	12
AM180	250	18	300	6.0	350	901	M16	206	0	48	110	51.8	14
AM200	300	20	350	7.0	400	942	M16	247	0	55	110	59.3	16
AM225	350	22	400	7.0	450	957	M16	262	0	60	140	64.4	18
AM250	450	25	500	7.0	550	1031	M16	336	19	65	140	69.4	18
AM280	450	25	500	7.0	550	1031	M16	336	19	75	140	79.9	20

01 043 01 01

RF147..

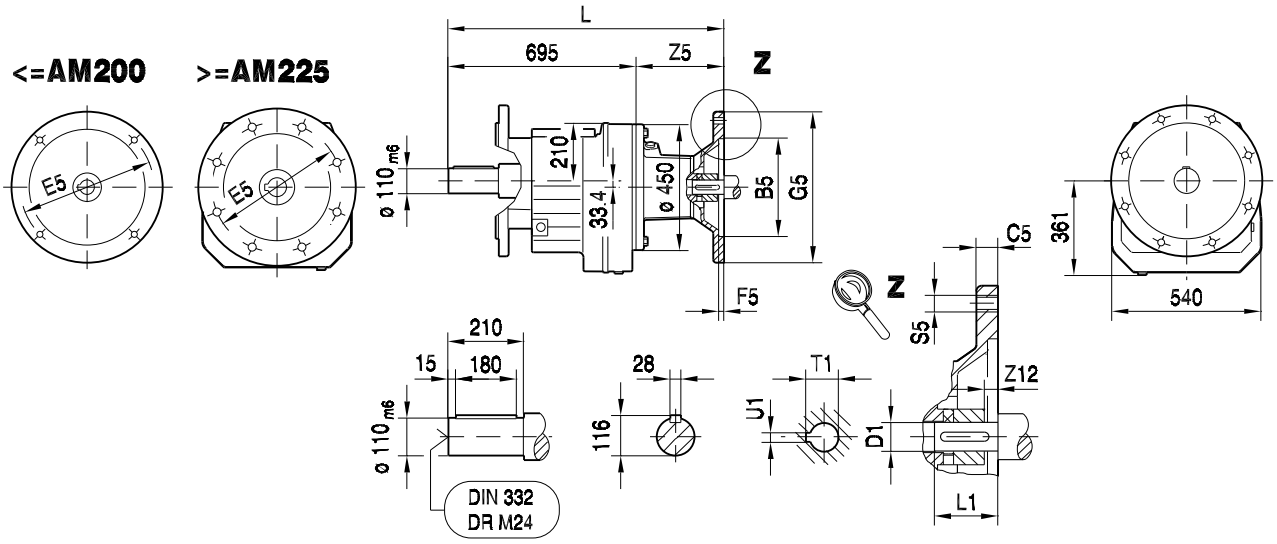

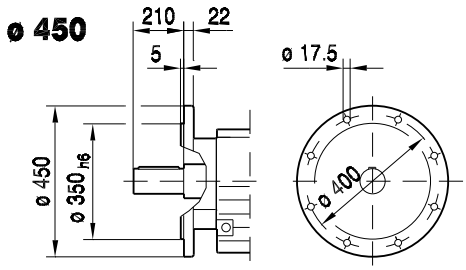

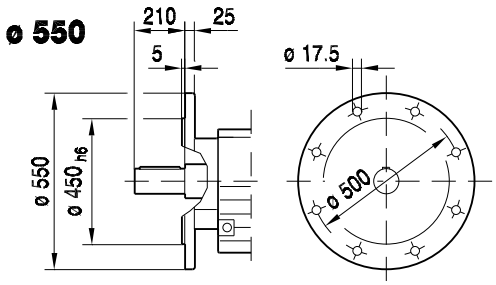

RM147..

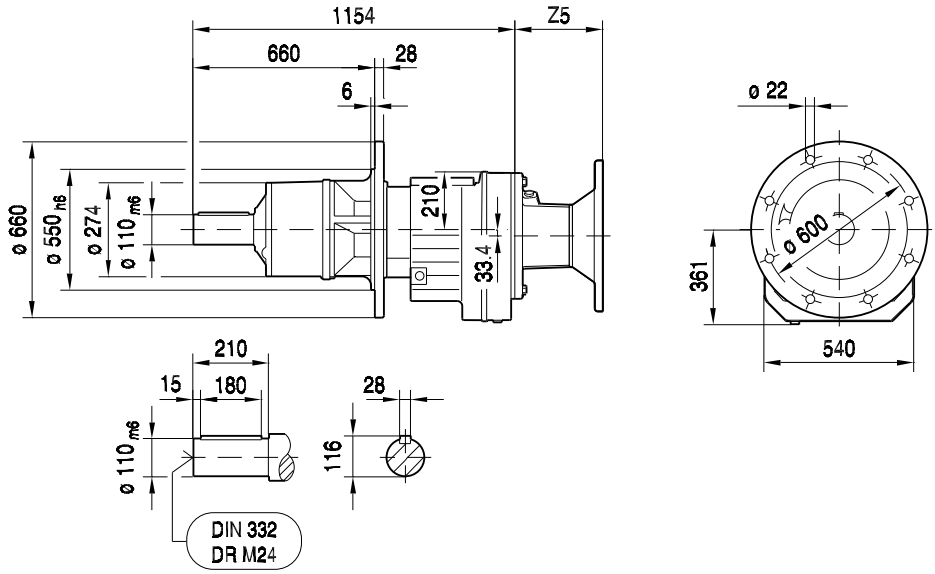

(→ 130)	B5	C5	E5	F5	G5	L	S5	Z5	Z12	D1	L1	T1	U1
AM132ML	230	16	265	5.0	300	843	M12	148	0	38	80	41.3	10
AM160	250	18	300	6.0	350	901	M16	206	0	42	110	45.3	12
AM180	250	18	300	6.0	350	901	M16	206	0	48	110	51.8	14
AM200	300	20	350	7.0	400	942	M16	247	0	55	110	59.3	16
AM225	350	22	400	7.0	450	957	M16	262	0	60	140	64.4	18
AM250	450	25	500	7.0	550	1031	M16	336	19	65	140	69.4	18
AM280	450	25	500	7.0	550	1031	M16	336	19	75	140	79.9	20

01 044 01 01

R167..

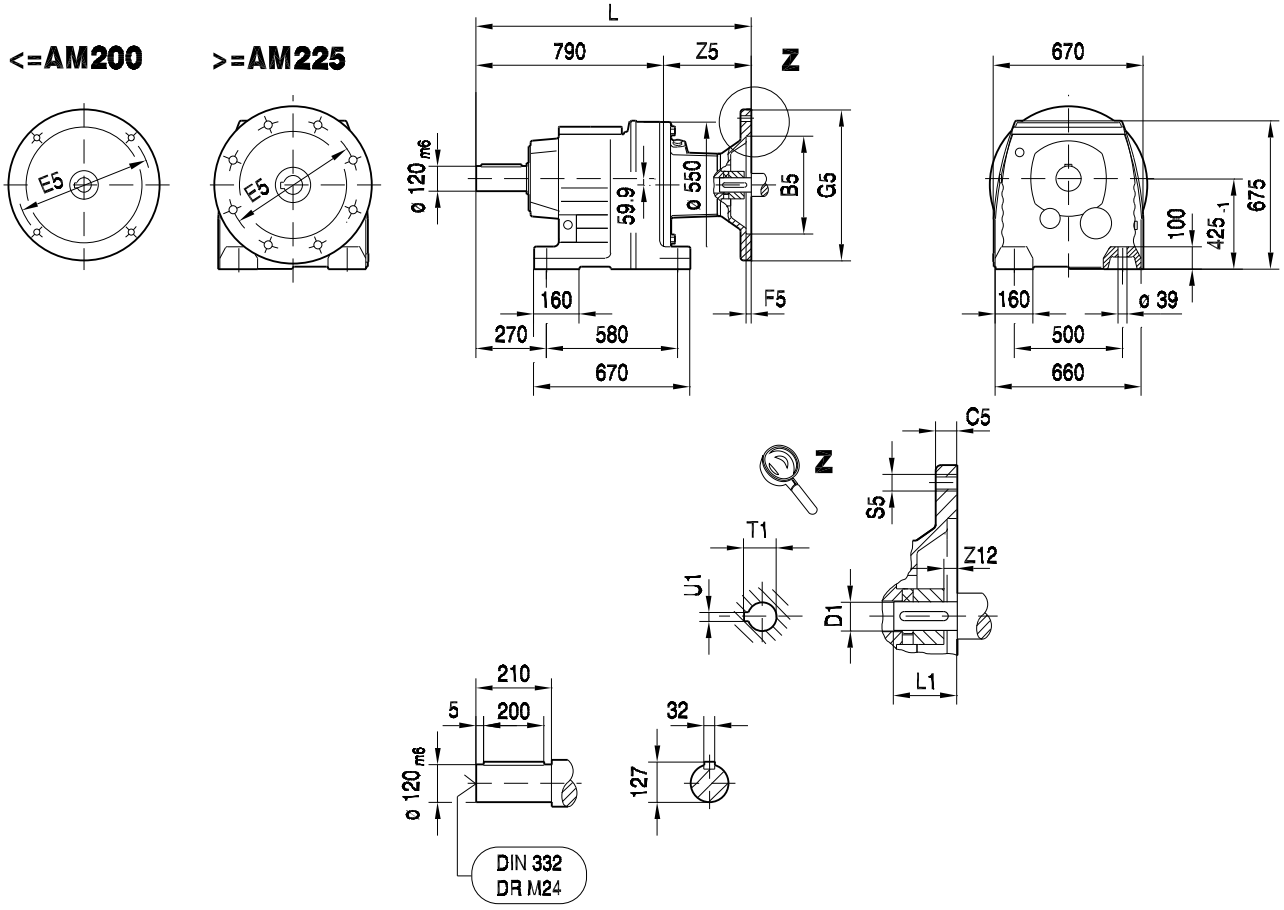

(→ 130)	B5	C5	E5	F5	G5	L	S5	Z5	Z12	D1	L1	T1	U1
AM160	250	18	300	6.0	350	988	M16	198	0	42	110	45.3	12
AM180	250	18	300	6.0	350	988	M16	198	0	48	110	51.8	14
AM200	300	20	350	7.0	400	1029	M16	239	0	55	110	59.3	16
AM225	350	22	400	7.0	450	1044	M16	254	0	60	140	64.4	18
AM250	450	25	500	7.0	550	1118	M16	328	19	65	140	69.4	18
AM280	450	25	500	7.0	550	1118	M16	328	19	75	140	79.9	20

01 045 01 01

RF167..

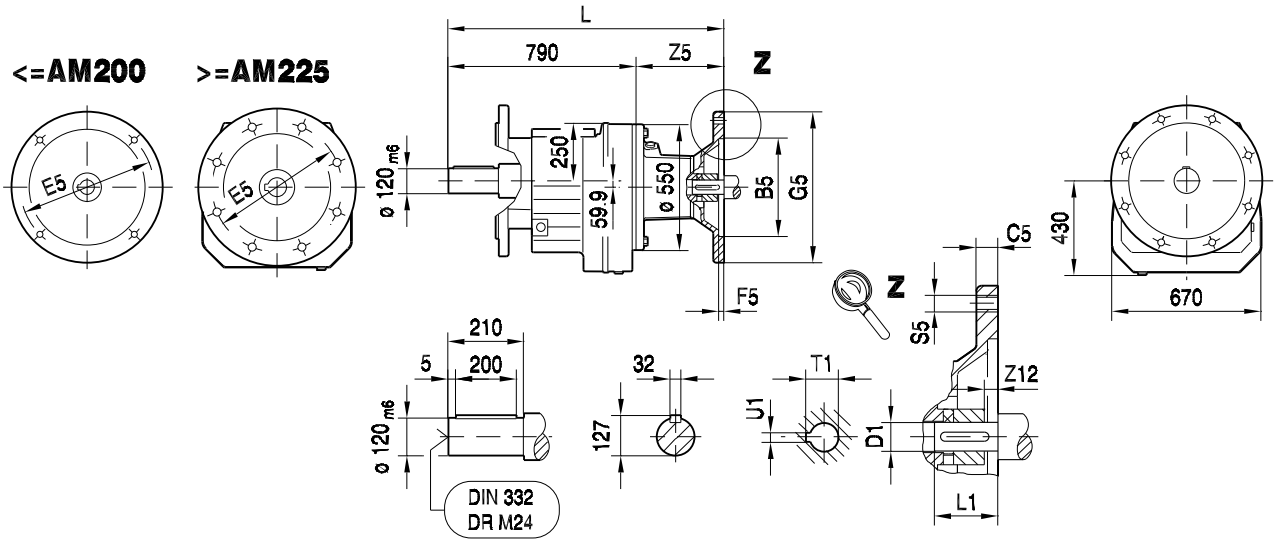

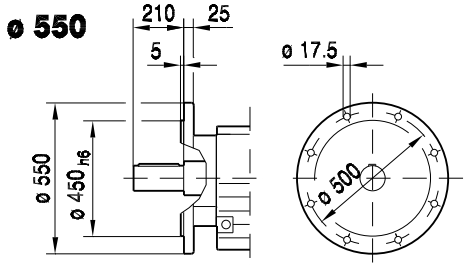

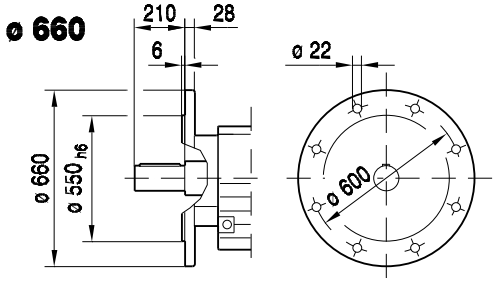

RM167..

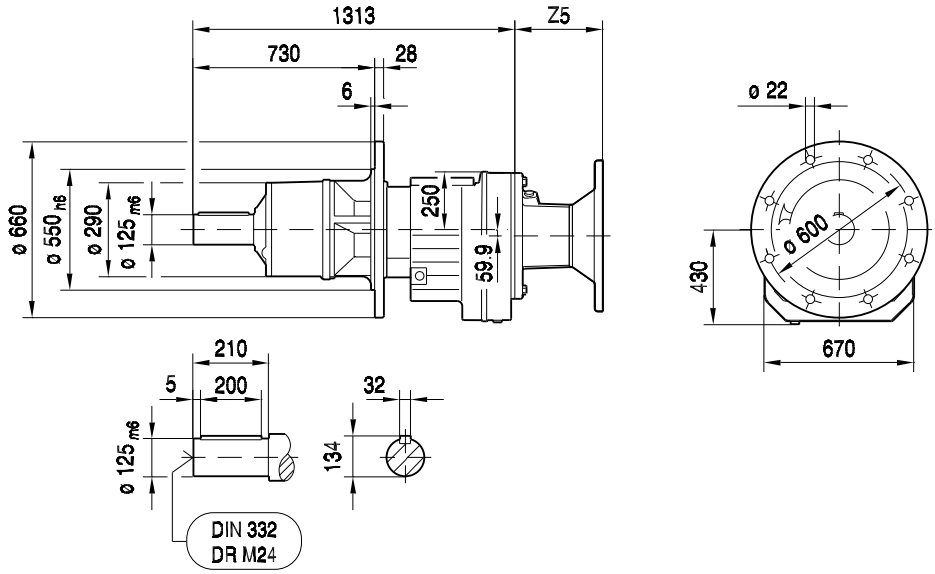

(→ 130)	B5	C5	E5	F5	G5	L	S5	Z5	Z12	D1	L1	T1	U1
AM160	250	18	300	6.0	350	988	M16	198	0	42	110	45.3	12
AM180	250	18	300	6.0	350	988	M16	198	0	48	110	51.8	14
AM200	300	20	350	7.0	400	1029	M16	239	0	55	110	59.3	16
AM225	350	22	400	7.0	450	1044	M16	254	0	60	140	64.4	18
AM250	450	25	500	7.0	550	1118	M16	328	19	65	140	69.4	18
AM280	450	25	500	7.0	550	1118	M16	328	19	75	140	79.9	20

8.5 R.. AM.. (NEMA) [mm]

01 047 02 01

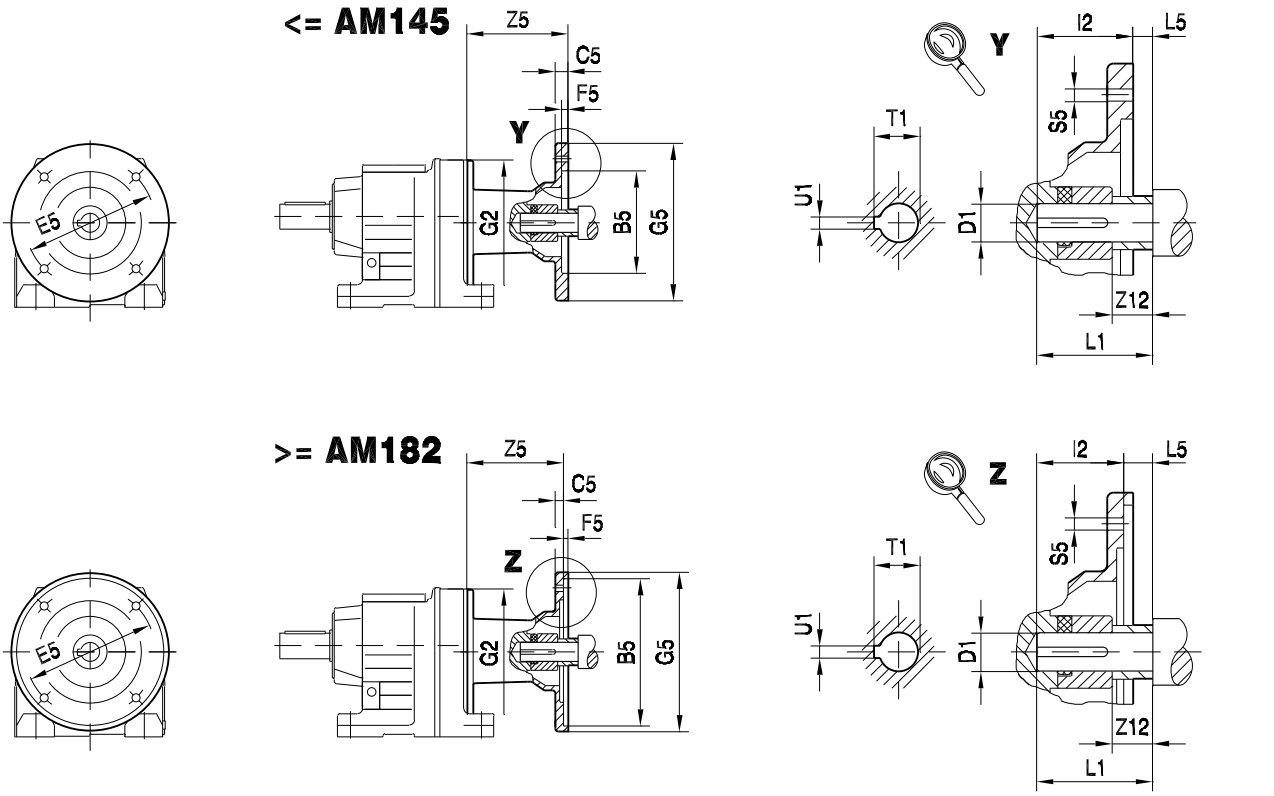

		B5	C5	E5	F5	G2	G5	I2	L5	S5	Z5	Z12	D1	L1	T1	U1
R..27 R..37	AM56	114.3	11	149.2	4.5	120	170	52.55	-4.8	10.5	93.5	16.5	15.875	47.75	18.1	4.76
	AM143		12					54.1	3		117	14.5	22.225	57.15	24.7	
	AM145															
R..47 R..57 R..67	AM56	114.3	11	149.2	4.5	160	170	52.55	-4.8	10.5	87	16.5	15.875	47.75	18.1	4.76
	AM143		12					54.1	3		110.5	14.5	22.225	57.15	24.7	
	AM145															
	AM182	215.9	10	184	5		228	66.85	3	15	147.5	16.5	28.575	69.85	31.7	6.35
	AM184															
	AM213/215		11					79.55	6.3		200.5	15.8	34.925	85.85	38.7	7.94
R..77	AM56	114.3	11	149.2	4.5	200	170	52.55	-4.8	10.5	81	16.5	15.875	47.75	18.1	4.76
	AM143		12					54.1	3		103.5	14.5	22.225	57.15	24.7	
	AM145															
	AM182	215.9	10	184	5		228	66,85	3	15	139.5	16.5	28.575	69.85	31.7	6.35
	AM184															
	AM213/215		11					79.55	6.3		188.5	15.8	34.925	85.85	38.7	7.94
R..87	AM143	114.3	12	149.2	4.5	250	170	54.1	3	10.5	98.5	14.5	22.225	57.15	24.7	4.76
	AM145															
	AM182	215.9	10	184	5		228	66.85	3	15	134.5	16.5	28.575	69.85	31.7	6.35
	AM184															
	AM213/215		11					79.55	6.3		183.5	15.8	34.925	85.85	38.7	7.94
	AM254/256		14					95.3	6.3		234	9	41.275	101.6	45.8	9.53
	AM284/286	266.7	15	228.6	5		286	111.05	6.3	15	241	15.8	47.625	117.35	53.4	12.7
R..97	AM182	215.9	10	184	5	300	228	66.85	3	15	129.5	16.5	28.575	69.85	31.7	6.35
	AM184															
	AM213/215		11					79.55	6.3		178.5	15.8	34.925	85.85	38.7	7.94
	AM254/256		12					95.3	6.3		229	9	41.275	101.6	45.8	9.53
	AM284/286	266.7	20	228.6	5		286	111.05	6.3	15	236	15.8	47.625	117.35	53.4	12.7
	AM324/326	317.5	17	279.4	5		356	127.05	6	17.5	296	34.8	53.975	133.35	60	12.7
	AM364/365							143.05					60.325	149.35	67.6	15.875

01 048 02 01

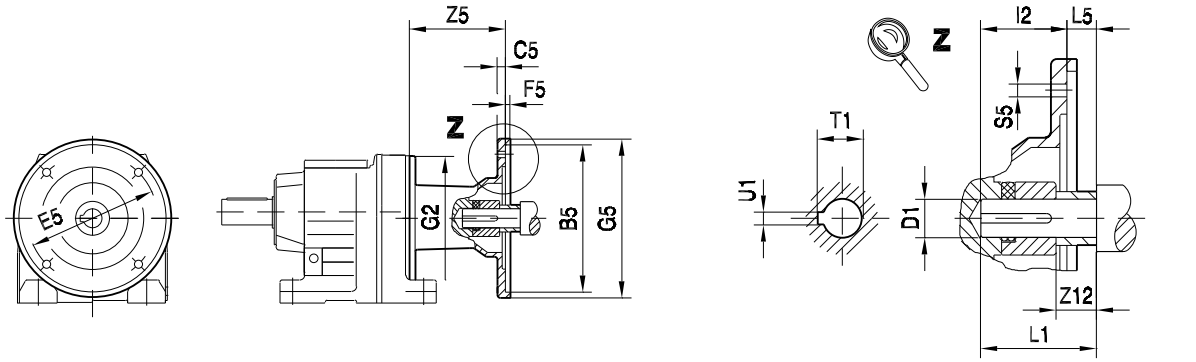

		B5	C5	E5	F5	G2	G5	I2	L5	S5	Z5	Z12	D1	L1	T1	U1
	AM182	215.9	10	184	5	350	228	66.85	3	15	123.5	16.5	28.575	69.85	31.7	6.35
	AM184															
	AM213/215		11					79.55	6.3		172.5	15.8	34.925	85.85	38.7	7.94
R..107	**AM254/256**		12					95.3	6.3		223	9	41.275	101.6	45.8	9.53
	AM284/286	266.7	15	228.6	5		286	111.05	6.3	15	230	15.8	47.625	117.35	53.4	12.7
	AM324/326	317.5	17	279.4	5		356	127.05	6.3	17.5	290	34.8	53.975	133.35	60	12.7
	AM364/365							143.05					60.325	149.35	67.6	15.875
	AM213/215	215.9	11	184	5	400	228	79.55	6.3	15	165.5	15.8	34.925	85.85	38.7	7.94
	AM254/256		12					95.3	6.3		216	9	41.275	101.6	45.8	9.53
R..137	**AM284/286**	266.7	15	228.6	5		286	111.05	6.3	15	223	15.8	47.625	117.35	53.4	12.7
	AM324/326	317.5	17	279.4	5		356	127.05	6.3	17.5	283	34.8	53.975	133.35	60	12.7
	AM364/365							143.05					60.325	149.35	67.6	15.875
	AM213/215	215.9	11	184	5	450	228	79.55	6.3	15	157.5	15.8	34.925	85.85	38.7	7.94
	AM254/256		12					95.3	6.3		208	9	41.275	101.6	45.8	9.53
R..147	**AM284/286**	266.7	15	228.6	5		286	111.05	6.3	15	215	15.8	47.625	117.35	53.4	12.7
	AM324/326	317.5	17	279.4	5		356	127.05	6.3	17.5	275	34.8	53.975	133.35	60	12.7
	AM364/365							143.05					60.325	149.35	67.6	15.875
	AM254/256	215.9	12	184	5	550	228	95.3	6.3	15	200	9	41.275	101.6	45.8	9.53
	AM284/286	266.7	15	228.6	5		286	111.05	6.3	15	207	15.8	47.625	117.35	53.4	12.7
R..167	**AM324/326**	317.5	17	279.4	5		356	127.05	6.3	17.5	267	34.8	53.975	133.35	60	12.7
	AM364/365							143.05					60.325	149.35	67.6	15.875

8.6 R.. AR.. [mm]

R.. AR..

01 052 02 01

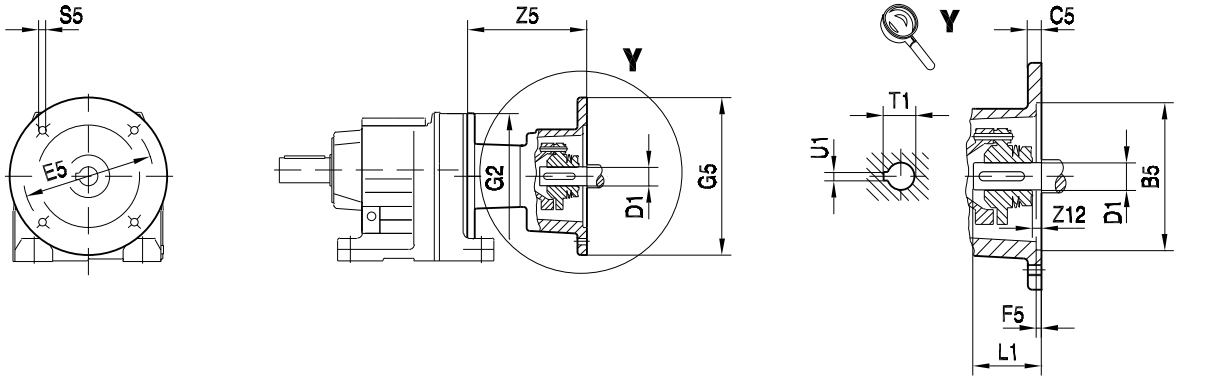

R.. AR../W

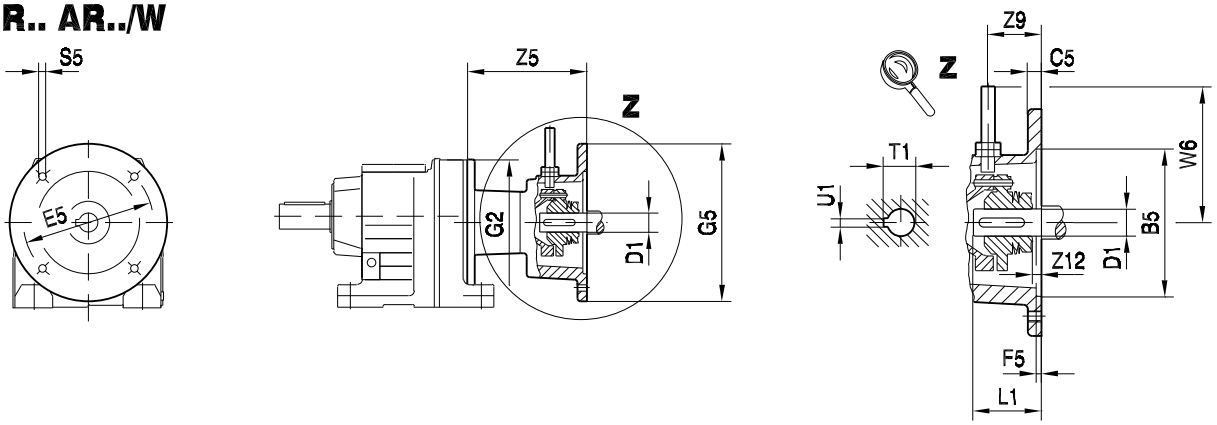

		B5	C5	E5	F5	G2	G5	S5	W6	Z5	Z9	Z12	D1	L1	T1	U1
R..27 R..37	**AR71**	110	10	130	3.5	120	160	M8	120	104	37	0	14	30	16.3	5
	AR80	130	12	165	4.5		200	M10		140.5			19	40	21.8	6
	AR90												24	50	27.3	8
R..47 R..57 R..67	**AR71**	110	10	130	3.5	160	160	M8	120	97.5	37	0	14	30	16.3	5
	AR80	130	12	165	4.5		200	M10		134			19	40	21.8	6
	AR90												24	50	27.3	8
	AR100	180	15	215	5		250	M12	130	174.5	52	5.5	28	60	31.3	8
	AR112															
R..77	**AR71**	110	10	130	3.5	200	160	M8	120	91.5	37	0	14	30	16.3	5
	AR80	130	12	165	4.5		200	M10		127			19	40	21.8	6
	AR90												24	50	27.3	8
	AR100	180	15	215	5		250	M12	130	166.5	52	5.5	28	60	31.3	8
	AR112															
	AR132S/M	230	16	265	5		300	M12	145	234	72	5	38	80	41.3	10
	AR132ML															
R..87	**AR80**	130	12	165	4.5	250	200	M10	120	122	37	0	19	40	21.8	6
	AR90												24	50	27.3	8
	AR100	180	15	215	5		250	M12	130	161.5	52	5.5	28	60	31.3	8
	AR112															
	AR132S/M	230	16	265	5		300	M12	145	229	72	5	38	80	41.3	10
	AR132ML															
	AR160	250	18	300	6		350	M16	165	306.5	105	35	42	110	45.3	12
	AR180												48	110	51.8	14

R.. AR..

01 053 02 01

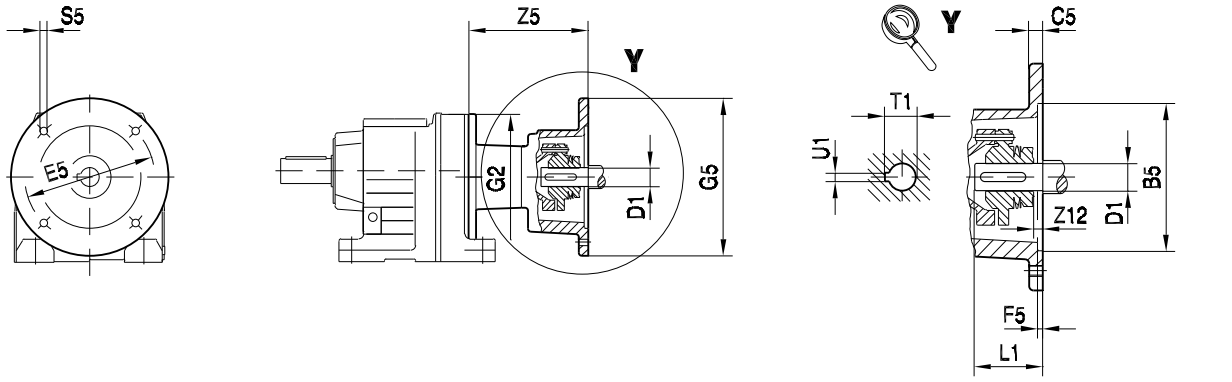

R.. AR../W

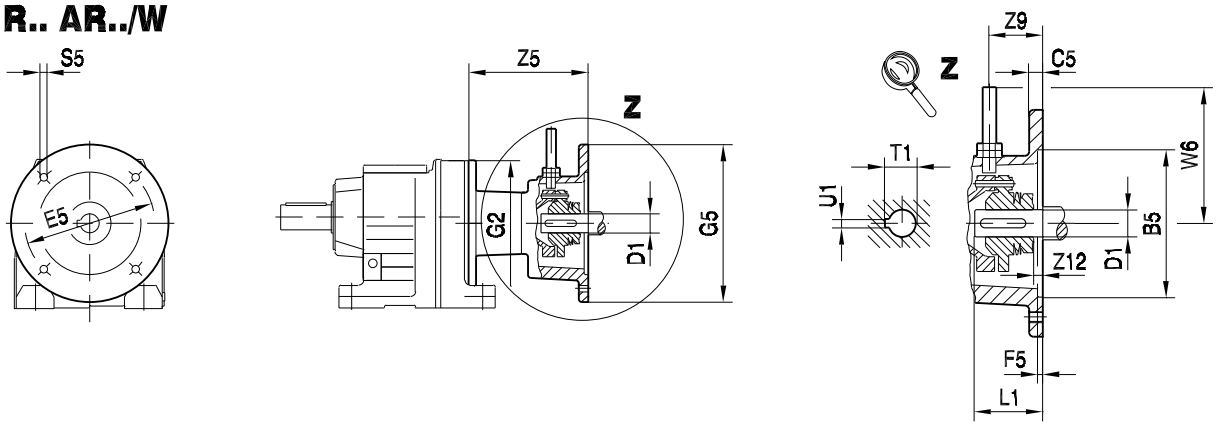

		B5	C5	E5	F5	G2	G5	S5	W6	Z5	Z9	Z12	D1	L1	T1	U1
R..97	AR100	180	15	215	5	300	250	M12	130	156.5	52	5.5	28	60	31.3	8
	AR112															
	AR132S/M	230	16	265	5		300	M12	145	224	72	5	38	80	41.3	10
	AR132ML															
	AR160	250	18	300	6		350	M16	165	301.5	105	35	42	110	45.3	12
	AR180												48	110	51.8	14
R..107	AR100	180	15	215	5	350	250	M12	130	150.5	52	5.5	28	60	31.3	8
	AR112															
	AR132S/M	230	16	265	5		300	M12	145	218	72	5	38	80	41.3	10
	AR132ML															
	AR160	250	18	300	6		350	M16	165	295.5	105	35	42	110	45.3	12
	AR180												48	110	51.8	14
R..137	AR132S/M	230	16	265	5	400	300	M12	145	211	72	5	38	80	41.3	10
	AR132ML															
	AR160	250	18	300	6		350	M16	165	288.5	105	35	42	110	45.3	12
	AR180												48	110	51.8	14
R..147	AR132S/M	230	16	265	5	450	300	M12	145	203	72	5	38	80	41.3	10
	AR132ML															
	AR160	250	18	300	6		350	M16	165	280.5	105	35	42	110	45.3	12
	AR180												48	110	51.8	14
R..167	AR160	250	18	300	6	550	350	M16	165	272.5	105	35	42	110	45.3	12
	AR180												48	110	51.8	14

8.7 R.. AT.. [mm]

25 001 02 01

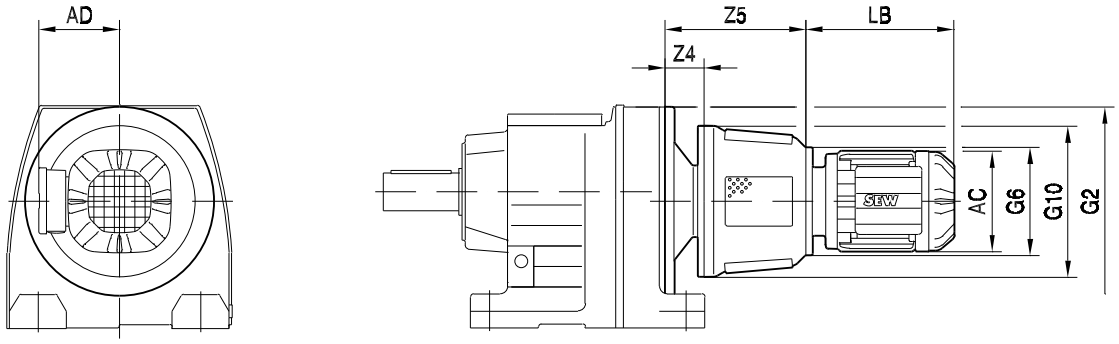

			AC	AD	G6	G10	LB	Z4	Z5	G2
R..67	AT311 AT312	DR.71S	139	119	200	280	198	97	286	160
		DR.71M					223			
		DR.80S	156	128			241			
		DR.80M					272			
		DR.90M	179	140			266			
		DR.90L					286			
		DR.100M	197	157			316			
		DR.100L/LC					346			
	AT321 AT322	DR.90M	179	140	250	350	266	97	333	
		DR.90L					286			
		DR.100M	197	157			316			
		DR.100L/LC					346			
R..77	AT311 AT312	DR.71S	139	119	200	280	198	89	278	200
		DR.71M					223			
		DR.80S	156	128			241			
		DR.80M					272			
		DR.90M	179	140			266			
		DR.90L					286			
		DR.100M	197	157			316			
		DR.100L/LC					346			
	AT421 AT422	DR.90M	179	140	250	350	266	133	368	
		DR.90L					286			
		DR.100M	197	157			316			
		DR.100L/LC					346			
		DR.112M	221	170			352			
		DR.132S					387			
		DR.132M/MC					437			

25 002 02 01

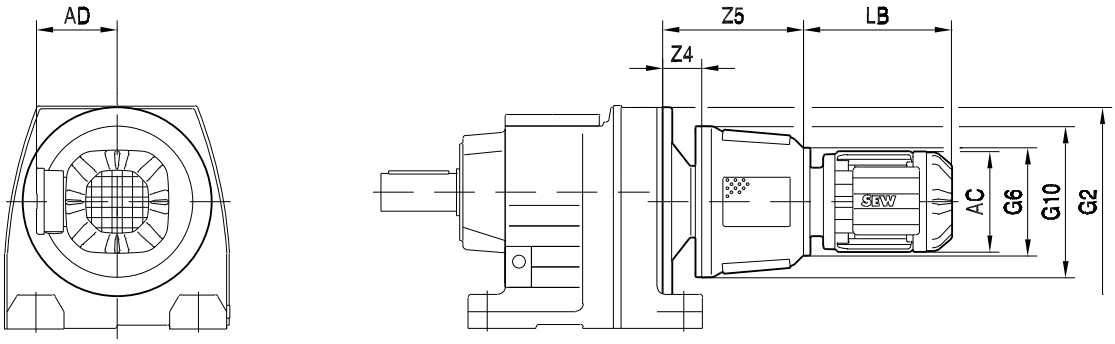

			AC	AD	G6	G10	LB	Z4	Z5	G2
R..87	AT311 AT312	DR.80M	156	128	200	280	272	84	273	250
		DR.90M	179	140			266			
		DR.90L					286			
		DR.100M	197	157			316			
		DR.100L/LC					346			
	AT421 AT422	DR.90M	179	140	250	350	266	128	363	
		DR.90L					286			
		DR.100M	197	157			316			
		DR.100L/LC					346			
		DR.112M	221	170			352			
		DR.132S					387			
		DR.132M/MC					437			
	AT522 AT541 AT542	DR.132S	221	170	350	470	363	159	478	
		DR.132M/MC					413			
		DR.160S/M/MC	270	228			460			
		DR.180S/M	316	253			523			
		DR.180L					583			
R..97	AT311 AT312	DR.80M	156	128	200	280	272	79	268	300
		DR.90M	179	140			266			
		DR.90L					286			
		DR.100M	197	157			316			
		DR.100L/LC					346			
	AT421 AT422	DR.90M	179	140	250	350	266	123	358	
		DR.90L					286			
		DR.100M	197	157			316			
		DR.100L/LC					346			
		DR.112M	221	170			352			
		DR.132S					387			
		DR.132M/MC					437			
	AT522 AT541 AT542	DR.132S	221	170	350	470	363	154	473	
		DR.132M/MC					413			
		DR.160S/M/MC	270	228			460			
		DR.180S/M	316	253			523			
		DR.180L					583			

25 003 02 01

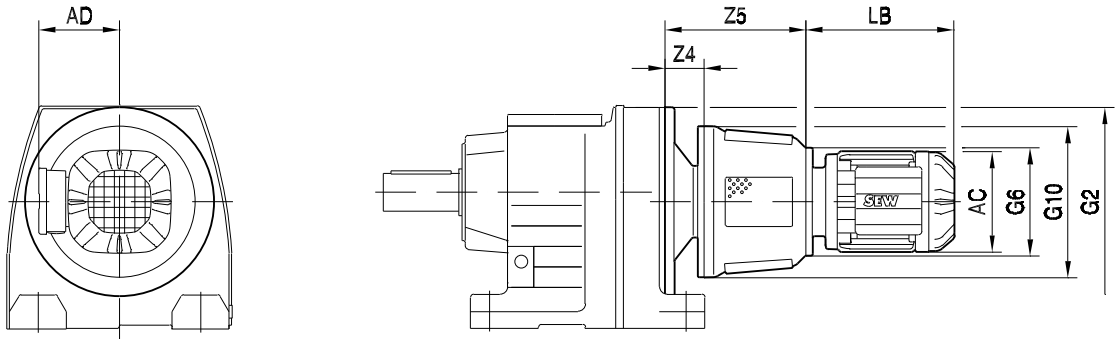

			AC	AD	G6	G10	LB	Z4	Z5	G2
R..107	AT311 AT312	DR.100M	197	157	200	280	316	73	262	350
		DR.100L/LC					346			
	AT421 AT422	DR.90L	179	140	250	350	286	117	352	
		DR.100M	197	157			316			
		DR.100L/LC					346			
		DR.112M	221	170			352			
		DR.132S					387			
		DR.132M/MC					437			
	AT522 AT541 AT542	DR.132S	221	170	350	470	363	148	467	
		DR.132M/MC					413			
		DR.160S/M/MC	270	228			460			
		DR.180S/M	316	253			523			
		DR.180L					583			
R..137	AT421 AT422	DR.90L	179	140	250	350	286	110	345	400
		DR.100M	197	157			316			
		DR.100L/LC					346			
		DR.112M	221	170			352			
		DR.132S					387			
		DR.132M/MC					437			
	AT522 AT541 AT542	DR.132S	221	170	350	470	363	141	460	
		DR.132M/MC					413			
		DR.160S/M/MC	270	228			460			
		DR.180S/M	316	253			523			
		DR.180L					583			
R..147	AT421 AT422	DR.132M/MC	221	170	250	350	437	102	337	450
	AT522 AT541 AT542	DR.132M/MC	221	170	350	470	413	133	452	
		DR.160S/M/MC	270	228			460			
		DR.180S/M	316	253			523			
		DR.180L					583			
R..167	AT522 AT541 AT542	DR.160M/MC	270	228	350	470	460	125	444	550
		DR.180S/M	316	253			523			
		DR.180L					583			

8.8 R.. AT../BMG [mm]

25 005 02 01

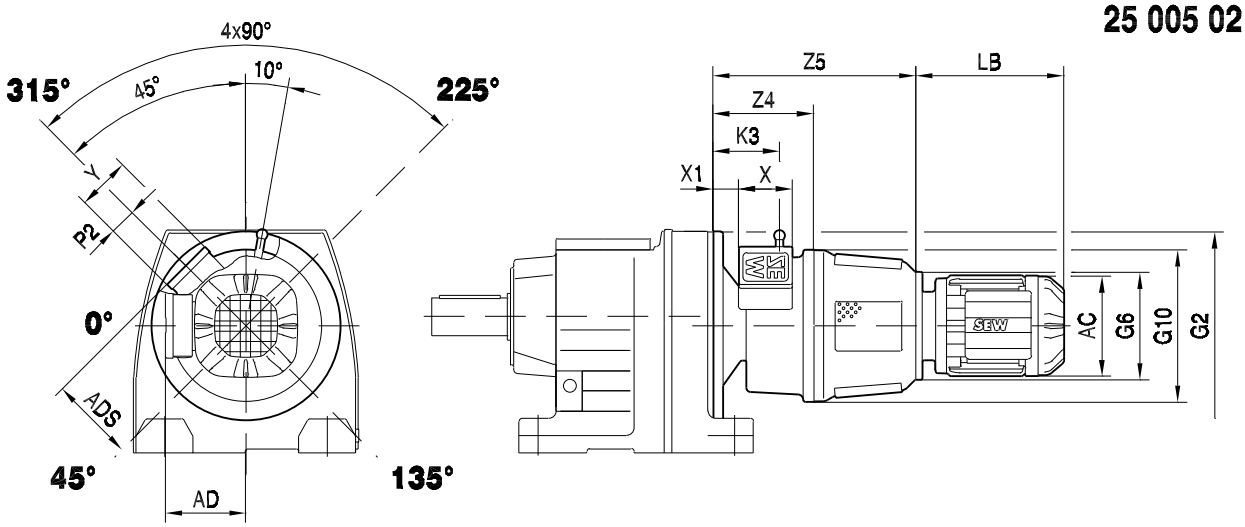

			AC	AD	ADS	G6	G10	LB	K3	P2	X	X1	Y	Z4	Z5	G2
R..67	AT311/BMG AT312/BMG	DR.71S	139	119	184	200	282	198	153	84	97	89	127	223	411	160
		DR.71M						223								
		DR.80S	156	128				241								
		DR.80M						272								
		DR.90M	179	140				266								
		DR.90L						286								
		DR.100M	197	157				316								
		DR.100L/LC						346								
	AT321/BMG AT322/BMG	DR.90M	179	140	215	250	352	266							458	
		DR.90L						286								
		DR.100M	197	157				316								
		DR.100L/LC						346								
R..77	AT311/BMG AT312/BMG	DR.71S	139	119	184	200	282	198	145	84	97	81	127	215	403	200
		DR.71M						223								
		DR.80S	156	128				241								
		DR.80M						272								
		DR.90M	179	140				266								
		DR.90L						286								
		DR.100M	197	157				316								
		DR.100L/LC						346								
	AT421/BMG AT422/BMG	DR.90M	179	140	215	250	352	266	183	84	97	119	127	252	488	
		DR.90L						286								
		DR.100M	197	157				316								
		DR.100L/LC						346								
		DR.112M	221	170				352								
		DR.132S						387								
		DR.132M/MC						437								

25 006 02 01

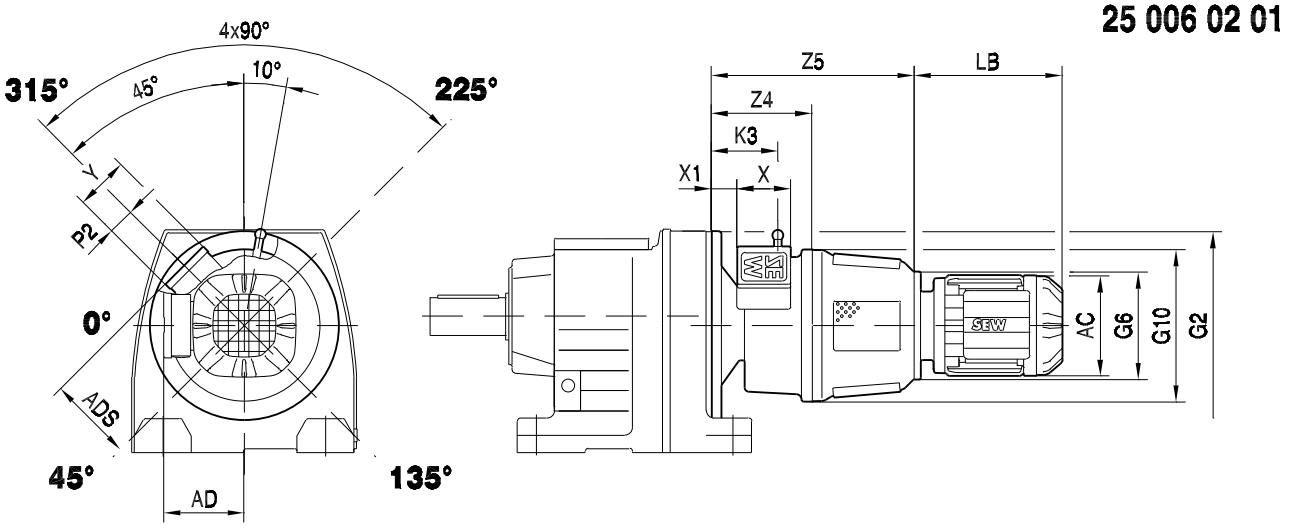

			AC	AD	ADS	G6	G10	LB	K3	P2	X	X1	Y	Z4	Z5	G2
R..87	AT311/BMG AT312/BMG	DR.80M	156	128	184	200	282	272	140	84	97	76	127	210	398	250
		DR.90M	179	140				266								
		DR.90L						286								
		DR.100M	197	157				316								
		DR.100L/LC						346								
	AT421/BMG AT422/BMG	DR.90M	179	140	215	250	352	266	178	84	97	114	127	247	483	
		DR.90L						286								
		DR.100M	197	157				316								
		DR.100L/LC						346								
		DR.112M	221	170				352								
		DR.132S						387								
		DR.132M/MC						437								
	AT522/BM AT541/BM AT542/BM	DR.132S	221	170	275	350	472	363	244	84	97	148	127	331	650	
		DR.132M/MC						413								
		DR.160S/M/MC	270	228				460								
		DR.180S/M	316	253				523								
		DR.180L						583								
R..97	AT311/BMG AT312/BMG	DR.80M	156	128	184	200	282	272	135	84	97	71	127	205	393	300
		DR.90M	179	140				266								
		DR.90L						286								
		DR.100M	197	157				316								
		DR.100L/LC						346								
	AT421/BMG AT422/BMG	DR.90M	179	140	215	250	352	266	173	84	97	109	127	242	478	
		DR.90L						286								
		DR.100M	197	157				316								
		DR.100L/LC						346								
		DR.112M	221	170				352								
		DR.132S						387								
		DR.132M/MC						437								
	AT522/BM AT541/BM AT542/BM	DR.132S	221	170	275	350	472	363	239	84	97	143	127	326	645	
		DR.132M/MC						413								
		DR.160S/M/MC	270	228				460								
		DR.180S/M	316	253				523								
		DR.180L						583								

25 007 02 01

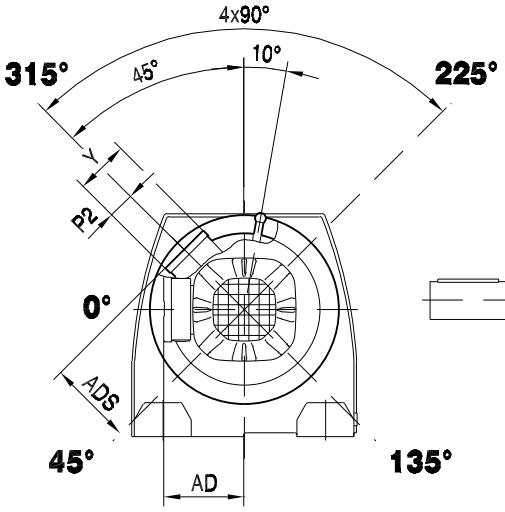

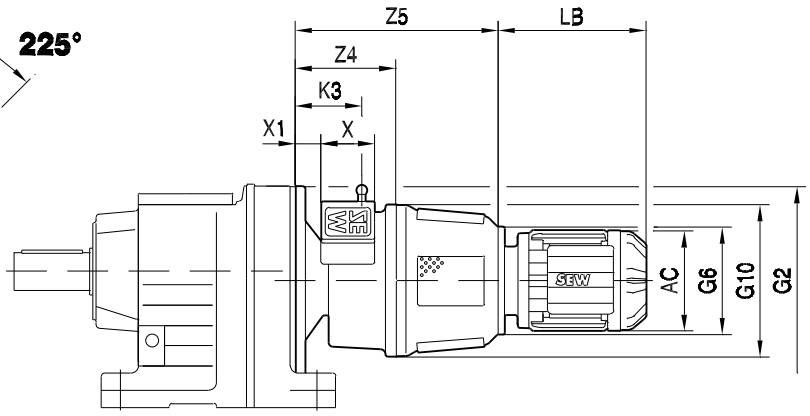

			AC	AD	ADS	G6	G10	LB	K3	P2	X	X1	Y	Z4	Z5	G2
R..107	AT311/BMG AT312/BMG	DR.100M	197	157	184	200	282	316	129	84	97	65	127	199	387	350
		DR.100L/LC						346								
	AT421/BMG AT422/BMG	DR.90L	179	140	215	250	352	286	167	84	97	103	127	236	472	
		DR.100M	197	157				316								
		DR.100L/LC						346								
		DR.112M	221	170				352								
		DR.132S						387								
		DR.132M/MC						437								
	AT522/BMp AT541/BMp AT542/BM	DR.132S	221	170	275	350	472	363	233	84	97	137	127	320	639	
		DR.132M/MC						413								
		DR.160S/M/MC	270	228				460								
		DR.180S/M	316	253				523								
		DR.180L						583								
R..137	AT421/BMG AT422/BMG	DR.90L	179	140	215	250	352	286	160	84	97	96	127	229	465	400
		DR.100M	197	157				316								
		DR.100L/LC						346								
		DR.112M	221	170				352								
		DR.132S						387								
		DR.132M/MC						437								
	AT522/BM AT541/BM AT542/BM	DR.132S	221	170	275	350	472	363	226	84	97	130	127	313	632	
		DR.132M/MC						413								
		DR.160S/M/MC	270	228				460								
		DR.180S/M	316	253				523								
		DR.180L						583								
R..147	AT421/BMG AT422/BMG	DR.132M/MC	221	170	215	250	352	437	152	84	97	88	127	221	457	450
	AT522/BM AT541/BM AT542/BM	DR.132M/MC	221	170	275	350	472	413	218	84	97	122	127	305	624	
		DR.160S/M/MC	270	228				460								
		DR.180S/M	316	253				523								
		DR.180L						583								
R..167	AT522/BM AT541/BM AT542/BM	DR.160M/MC	270	228	275	350	472	460	210	84	97	114	127	297	616	550
		DR.180S/M	316	253				523								
		DR.180L						583								

8.9 R.. AD.. [mm]

R.. AD..

01 054 01 01

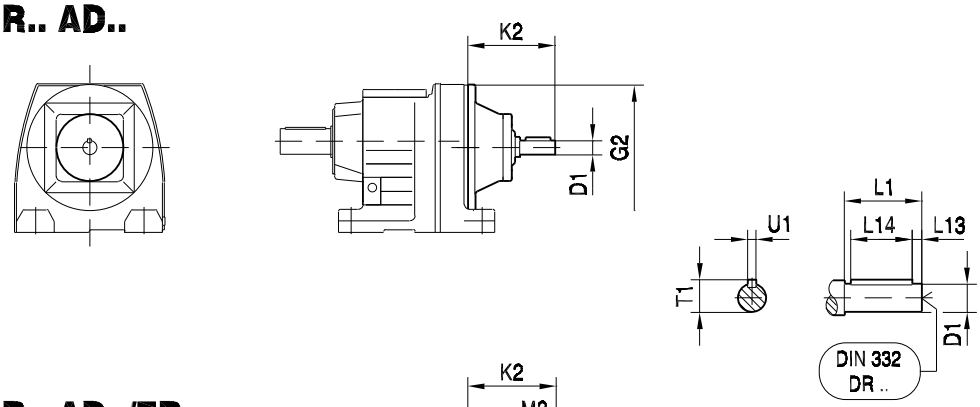

R.. AD../ZR

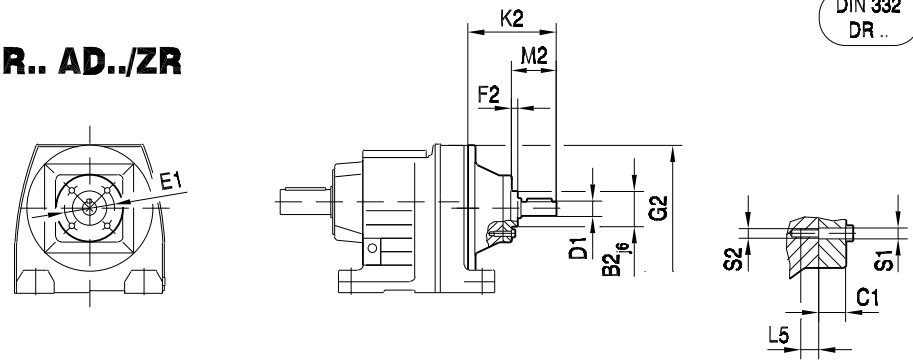

		B2	C1	E1	F2	G2	K2	L5	M2	S1	S2	D1	L1	L13	L14	T1	U1
R..27	**AD1**	-	-	-	-	120	102	-	-	-	-	16	40	4	32	18	5
R..37	**AD2 , AD2/ZR**	55	13.5	80	8		130	12	50	9	M8	19	40	4	32	21.5	6
R..47	**AD2 , AD2/ZR**	55	13.5	80	8	160	123	12	50	9	M8	19	40	4	32	21.5	6
R..57 **R..67**	**AD3 , AD3/ZR**	70	15.5	105	8		159	16	60	11	M10	24	50	5	40	27	8
R..77	**AD2 , AD2/ZR**	55	13.5	80	8	200	116	12	50	9	M8	19	40	4	32	21.5	6
	AD3 , AD3/ZR	70	15.5	105	8		151	16	60	11	M10	24	50	5	40	27	8
	AD4 , AD4/ZR	100	16	130	13		224	20	95.5	13.5	M12	38	80	5	70	41	10
R..87	**AD2 , AD2/ZR**	55	13.5	80	8	250	111	12	50	9	M8	19	40	4	32	21.5	6
	AD3 , AD3/ZR	70	15.5	105	8		156	16	70	11	M10	28	60	5	50	31	8
	AD4 , AD4/ZR	100	16	130	13		219	20	95.5	13.5	M12	38	80	5	70	41	10
	AD5 , AD5/ZR	120	24	180	11		292	20	126	13.5	M12	42	110	10	70	45	12
R..97	**AD3 , AD3/ZR**	70	15.5	105	8	300	151	16	70	11	M10	28	60	5	50	31	8
	AD4 , AD4/ZR	100	16	130	13		214	20	95.5	13.5	M12	38	80	5	70	41	10
	AD5 , AD5/ZR	120	24	180	11		287	20	126	13.5	M12	42	110	10	70	45	12
	AD6 , AD6/ZR	130	22.5	200	11		327	26	130.5	17.5	M16	48	110	10	80	51.5	14
R..107	**AD3 , AD3/ZR**	70	15.5	105	8	350	145	16	70	11	M10	28	60	5	50	31	8
	AD4 , AD4/ZR	100	16	130	13		208	20	95.5	13.5	M12	38	80	5	70	41	10
	AD5 , AD5/ZR	120	24	180	11		281	20	126	13.5	M12	42	110	10	70	45	12
	AD6 , AD6/ZR	130	22.5	200	11		321	26	130.5	17.5	M16	48	110	10	80	51.5	14
R..137	**AD4 , AD4/ZR**	100	16	130	13	400	201	20	95.5	13.5	M12	38	80	5	70	41	10
	AD5 , AD5/ZR	120	24	180	11		274	20	126	13.5	M12	42	110	10	70	45	12
	AD6 , AD6/ZR	130	22.5	200	11		314	26	130.5	17.5	M16	48	110	10	80	51.5	14
	AD7 , AD7/ZR	125	19	190	13		308	30	133	22	M20	55	110	10	90	59	16
R..147	**AD4 , AD4/ZR**	100	16	130	13	450	193	20	95.5	13.5	M12	38	80	5	70	41	10
	AD5 , AD5/ZR	120	24	180	11		266	20	126	13.5	M12	42	110	10	70	45	12
	AD6 , AD6/ZR	130	22.5	200	11		306	26	130.5	17.5	M16	48	110	10	80	51.5	14
	AD7 , AD7/ZR	125	19	190	13		300	30	133	22	M20	55	110	10	90	59	16
	AD8 , AD8/ZR	120	22.5	210	5		383	19.5	155	13.5	M12	70	140	15	110	74.5	20
R..167	**AD5 , AD5/ZR**	120	24	180	11	550	258	20	126	13.5	M12	42	110	10	70	45	12
	AD6 , AD6/ZR	130	22.5	200	11		298	26	130.5	17.5	M16	48	110	10	80	51.5	14
	AD7 , AD7/ZR	125	19	190	13		292	30	133	22	M20	55	110	10	90	59	16
	AD8 , AD8/ZR	120	22.5	210	5		374	19.5	155	13.5	M12	70	140	15	110	74.5	20

8.10 R.. AD../P [mm]

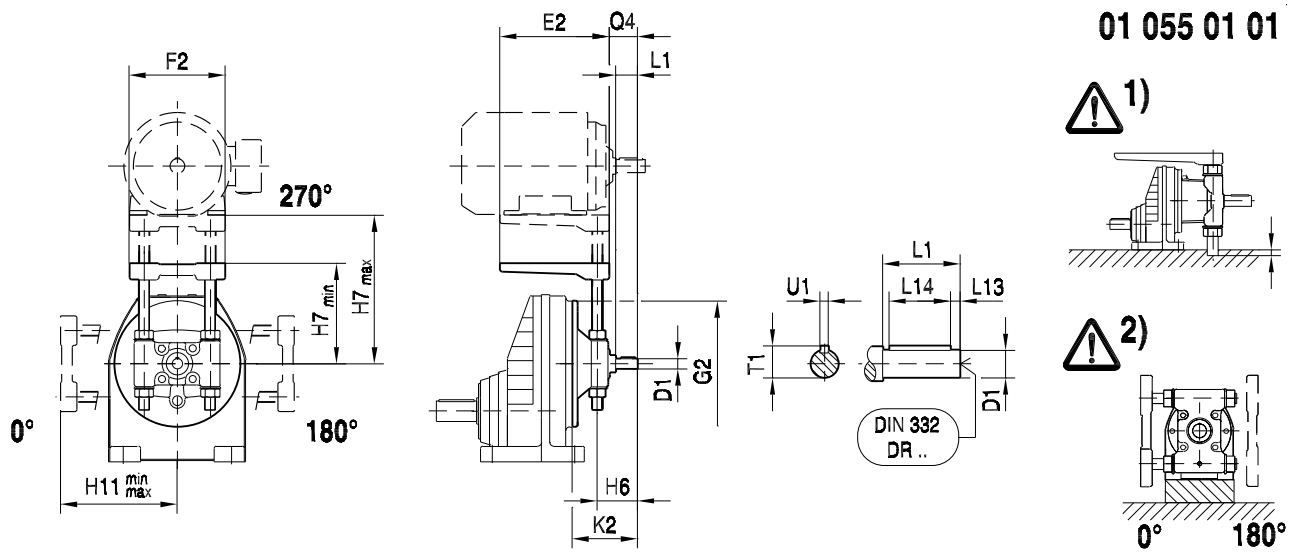

		E2	F2	G2	H6	H7 min	H7 max	H11 min	H11 max	K2	Q4	D1	L1	L13	L14	T1	U1	⚠ →129
RX..57	**AD2/P**	195	180	160	65	110	165	115	165	123	43	19	40	4	32	21.5	6	
	AD3/P	230	240		80	110	175	120	175	159	54	24	50	5	40	27	8	1), 2)
RX..67	**AD2/P**	195	180	160	65	110	165	125	165	123	43	19	40	4	32	21.5	6	
	AD3/P	230	240		80	110	175	130	175	159	54	24	50	5	40	27	8	1)
RX..77	**AD2/P**	195	180	200	65	130	165	140	200	116	43	19	40	4	32	21.5	6	
	AD3/P	230	240		80	135	175	145	175	151	54	24	50	5	40	27	8	
	AD4/P	345	291		118	145	210	160	210	224	83	38	80	5	70	41	10	1), 2)
RX..87	**AD2/P**	195	180	250	65	160	200	170	200	111	43	19	40	4	32	21.5	6	
	AD3/P	230	240		90	165	230	175	230	156	64	28	60	5	50	31	8	
	AD4/P	345	291		118	170	210	195	280	219	83	38	80	5	70	41	10	
	AD5/P	430	355		153	175	250	200	250	292	113	42	110	10	70	45	12	1), 2)
RX..97	**AD3/P**	230	240	300	90	185	230	205	320	151	64	28	60	5	50	31	8	
	AD4/P	345	291		118	195	280	220	280	214	83	38	80	5	70	41	10	
	AD5/P	430	355		153	195	250	225	325	287	113	42	110	10	70	45	12	
RX..107	**AD3/P**	230	240	350	90	210	320	225	320	145	64	28	60	5	50	31	8	
	AD4/P	345	291		118	220	280	270	360	208	83	38	80	5	70	41	10	
	AD5/P	430	355		153	220	325	275	325	281	113	42	110	10	70	45	12	
	AD6/P	495	457		163	245	310	250	310	321	114	48	110	10	80	51.5	14	

R..
R.. AD../P [mm]

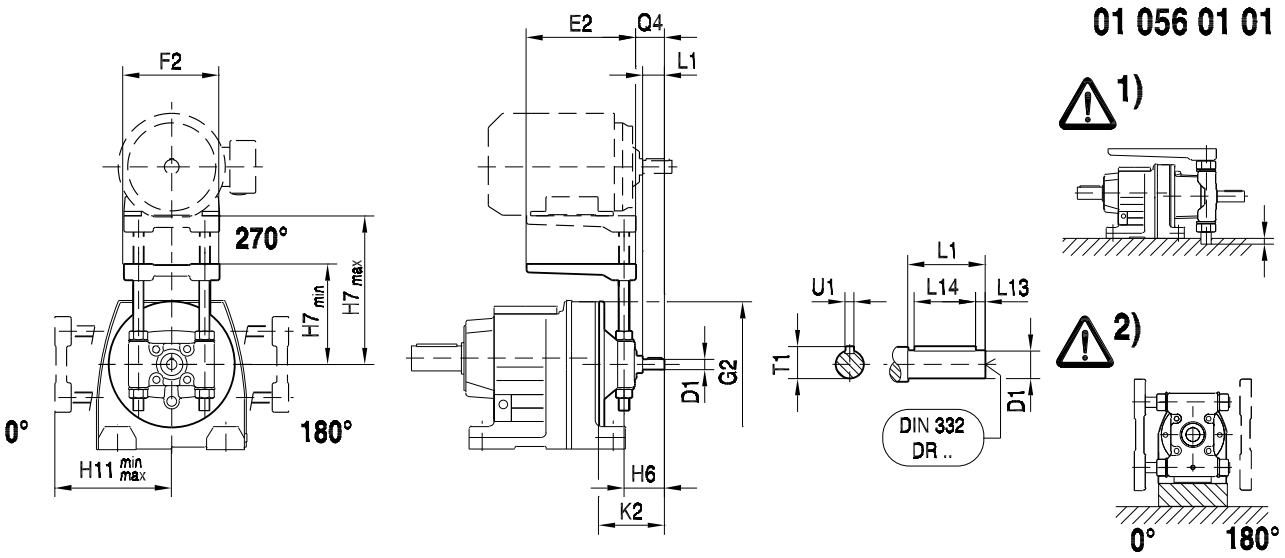

		E2	F2	G2	H6	H7 min	H7 max	H11 min	H11 max	K2	Q4	D1	L1	L13	L14	T1	U1	⚠ →129
R..27	**AD2/P**	195	180	120	65	100	165	120	165	130	43	19	40	4	32	21.5	6	1), 2)
R..37	**AD2/P**	195	180	120	65	110	165	120	165	130	43	19	40	4	32	21.5	6	1), 2)
R..47	**AD2/P**	195	180	160	65	125	165	135	165	123	43	19	40	4	32	21.5	6	
	AD3/P	230	240		80	130	175	140	175	159	54	24	50	5	40	27	8	1), 2)
R..57	**AD2/P**	195	180	160	65	125	165	145	200	123	43	19	40	4	32	21.5	6	
	AD3/P	230	240		80	130	175	155	230	159	54	24	50	5	40	27	8	1), 2)
R..67	**AD2/P**	195	180	160	65	125	165	155	200	123	43	19	40	4	32	21.5	6	
	AD3/P	230	240		80	130	175	160	230	159	54	24	50	5	40	27	8	1), 2)
R..77	**AD2/P**	195	180	200	65	135	200	165	200	116	43	19	40	4	32	21.5	6	1)
	AD3/P	230	240		80	145	175	170	230	151	54	24	50	5	40	27	8	
	AD4/P	345	291		118	150	210	175	210	224	83	38	80	5	70	41	10	1), 2)
R..87	**AD2/P**	195	180	250	65	155	200	195	260	111	43	19	40	4	32	21.5	6	
	AD3/P	230	240		90	165	230	185	230	156	64	28	60	5	50	31	8	
	AD4/P	345	291		118	165	210	205	280	219	83	38	80	5	70	41	10	
	AD5/P	430	355		153	210	250	215	250	292	113	42	110	10	70	45	12	1), 2)
R..97	**AD3/P**	230	240	300	90	180	230	235	320	151	64	28	60	5	50	31	8	
	AD4/P	345	291		118	190	280	240	280	214	83	38	80	5	70	41	10	
	AD5/P	430	355		153	190	250	245	325	287	113	42	110	10	70	45	12	
R..107	**AD3/P**	230	240	350	90	230	320	230	320	145	64	28	60	5	50	31	8	
	AD4/P	345	291		118	230	280	265	360	208	83	38	80	5	70	41	10	
	AD5/P	430	355		153	225	325	270	325	281	113	42	110	10	70	45	12	1)
	AD6/P	495	457		163	245	310	250	310	321	114	48	110	10	80	51.5	14	
R..137	**AD4/P**	345	291	400	118	245	280	280	360	201	83	38	80	5	70	41	10	
	AD5/P	430	355		153	245	325	285	325	274	113	42	110	10	70	45	12	1)
	AD6/P	495	457		163	270	335	275	335	314	114	48	110	10	80	51.5	14	
R..147	**AD4/P**	345	291	450	118	270	360	315	360	193	83	38	80	5	70	41	10	
	AD5/P	430	355		153	275	325	330	405	266	113	42	110	10	70	45	12	
	AD6/P	495	457		163	295	360	310	360	306	114	48	110	10	80	51.5	14	
	AD7/P	650	570		170	300	365	300	365	300	112	55	110	10	90	59	16	3)
R..167	**AD5/P**	430	355	550	153	345	405	385	495	258	113	42	110	10	70	45	12	
	AD6/P	495	457		163	375	475	375	475	298	114	48	110	10	80	51.5	14	
	AD7/P	650	570		170	375	475	380	475	292	112	55	110	10	90	59	16	

Seite bleibt aus drucktechnischen Gründen frei.

Page remains empty for printing reasons.